United States
Environmental Protection
Agency

Effluent Guidelines Division
WH-552
Washington, DC 20460

EPA 440/1-79/003
August 1979

Water and Waste Management

EPA

Development Document for Existing Source Pretreatment Standards for the Electroplating Point Source Category

Final

DEVELOPMENT DOCUMENT

for

EXISTING SOURCE PRETREATMENT STANDARDS

for the

ELECTROPLATING

POINT SOURCE CATEGORY

Douglas M. Costle
Administrator

Swep Davis
Deputy Assistant Administrator
for Water Planning and Standards

Robert B. Schaffer
Director, Effluent Guidelines Division

Ernst P. Hall, P.E.
Chief, Metals and Machinery Branch

J. Bill Hanson, P.E.
Project Officer

August 1979

Effluent Guidelines Division
Office of Water and Hazardous Materials
U.S. Environmental Protection Agency
Washington, D.C. 20460

ABSTRACT

This report presents the findings of an extensive study of electroplating processes for the purpose of developing pretreatment standards for existing point sources discharging to publicly owned treatment works (POTW) to implement Section 307(b) of the Clean Water Act, as amended (33 U.S.C. 1317(b)), which requires the establishment of pretreatment standards for pollutants introduced into publicly owned treatment works (POTWs). This regulation is also being promulgated in compliance with the Settlement Agreement in Natural Resources Defense Council, Inc. v. Train, 8 ERC 2120 (D.D.C. 1976), as modified March 9, 1979.

This study presents pretreatment standards for the entire electroplating point source category for existing sources discharging to municipal treatment systems. Pretreatment standards for existing sources presented in this document describe the degree of effluent reduction attainable through the application of the best practicable control technology currently available and do not account for the further incidental treatment to be performed by municipal treatment systems.

These standards may be achieved by chemical treatment of the waste waters to destroy oxidizable cyanide, reduce hexavalent chromium, and removal of all but small amounts of metals using conventional solids removal equipment. In-process control equipment such as ion exchange, evaporation or reverse osmosis may also be used, either alone or in conjunction with the end-of-pipe control equipment to achieve these standards.

Pretreatment standards setting forth the degree of pollutant reduction attainable through the application of the best available technology economically achievable (BAT) will be published at a later date. The standards of performance for new sources discharging to surface waters or municipal treatment systems will also be published at a later date.

CONTENTS

TABLES

FIGURES

SECTION I

CONCLUSIONS

For the purpose of establishing pretreatment standards, the electroplating point source category was divided into three segments: plating, metal finishing and printed circuit board manufacture. The plating category was then subdivided into common metal electroplating, precious metal electroplating and electroless plating. The metal finishing segment was subdivided into anodizing, coating, chemical milling, and etching. The printed board manufacturing segment was not subdivided like the plating and metal finishing segments because printed board manufacturing is a unique mixture of operations and does not require further subdivision. These subcategory selections were based on a review of potential subcategory bases including: types of processes, types of basis materials, raw materials used, size and age of facilities, number of employees, geographic location, quantity of work processed, waste characteristics, treatment technology, and water use.

Of these potential subcategorization parameters, raw materials used (plating baths) is the most suitable for the plating segment because it focuses on the plating baths, and the dragout from these baths is the major source of wastes in this industry segment. The value of plating bath constituents dictates the type of treatment and recovery practices for the plating wastes. The types of manufacturing processes are the basis for subcategorization for the metal finishing segment as they are the source of wastes from the plant and inherently encompass the process baths used. Manufacturing processes also provide a basis for subdividing the printed board industry. However, because of the similarity in operations and wastes for printed board plants, only one subcategory is selected for printed board manufacture.

The pretreatment standards can be expressed in units of mass of pollutant discharged per unit area processed for each plating or metal finishing operation performed (mg/operation-sq m). For printed board manufacture, area immersed is used in place of area processed. Area immersed accounts for the dragout from the masked portion of the board. The units in which the limitations are expressed directly reflect the quantity of work performed by a plant and indirectly relate to the number of parts processed, the size of the plant, and the number of employees. These units are practical to derive, apply and enforce, and they represent an absolute control on pollution. In addition, pretreatment standards can also be specified in terms of concentration.

Pretreatment standards for electroplating were generally based on actual performance by plants. This actual performance was determined by plant visits and plant submitted data. Incidential pollutant removal accomplished by municipal treatment systems was not considered when determining these pretreatment standards.

SECTION II

RECOMMENDATIONS

Proposed pretreatment standards for existing facilities discharging to municipal treatment plants are summarized in Table 2-1. As shown in the table, the limitations specified in this document are expressed in terms of concentration (mg/l). Concentration limits are specified primarily because of the ease of enforcing such regulations. Section XII details the rationale for these standards as well as the optional standards which follow. The table also shows a separate set of regulations for smaller electroplating sources. These are defined as plants discharging less than 38,000 liters (10,000 gallons) per day of electroplating process water. This division was established in order to minimize the economic impact to small sources caused by new regulations. In future regulations, the Agency expects to define small electroplating sources on the basis of the mass of pollutants discharged as well as flow.

Table 2-2 presents an optional set of mass-based standards for plants discharging more than 38,000 liters (10,000 gallons) per day of electroplating process wastewater. These limitations may be used in place of the concentration based standards upon prior agreement with the publicly owned treatment works receiving the wastes. These standards were designed as an equivalent to the concentration limits for use by plants which recover process solutions and practice water conservation. The link between the concentration standards and the mass-based standards is a flow conversion factor (liters/square meter). This flow conversion is the average production related flow of the relevant plants in the data base (Reference Section XII).

Another optional set of limitations is the TSS monitoring alternate (Table 2-3) in which TSS replaces Cu, Ni, Cr, and Zn as monitoring parameters. The TSS monitoring alternate may be used with the following stipulations:

- No strong chelating agents are present in the waste, such as cyanide, ammonia, EDTA, quadrol, HEDTA, NTA and DTPA (and other amino polycarboxylic acid-type chelates).
- Hexavalent chromium wastes are reduced.
- All wastewaters are neutralized with calcium oxide (or hydroxide).

These optional TSS regulations were developed in order to relieve the monitoring burden from those plants who presently have a well operated waste treatment system. The Agency believes that if the required level of suspended solids is met, the individual metal and total metal

concentrations of the effluent streams will not be greater than their regulated concentrations.

Section XII explains the monitoring requirements and their derivations. If regulated pollutants are found in concentrations less than .10 mg/l and the owner or operator of the plant attests that such pollutants are not a part of his raw materials or processes, then monitoring of these pollutants may be omitted for six months. (Reference Section XII).

TABLE 2-1

RECOMMENDED PRETREATMENT STANDARDS

Pollutant or Pollutant Property	PRETREATMENT STANDARD Maximum for Any 1 Day (mg/l)	PRETREATMENT STANDARD Average of Daily Values for 30 Consecutive Days Shall Not Exceed (mg/l)	SMALL PLATER[1] PRETREATMENT STANDARD Maximum for Any 1 Day (mg/l)	SMALL PLATER[1] PRETREATMENT STANDARD Average of Daily Values for 30 Consecutive Days Shall Not Exceed (mg/l)
CN, Amenable			5.0	1.5
CN, Total	0.8	0.23		
Cu	4.5	1.8		
Ni	4.1	1.8		
Cr. Total	7.0	2.5		
Zn	4.2	1.8		
Pb	0.6	0.3	0.6	0.3
Cd	1.2	0.5	1.2	0.5
Total Metals[2]	10.5	5.0		
Silver[3]				

Notes:

1) "Small plater" indicates plants discharging less than 38,000 liters (10,000 gallons) per day of electroplating process waste water.

2) "Total metals" is defined as the sum of the concentration of copper, nickel, total chromium, and zinc.

3) The silver pretreatment standard applies only to Subpart B, precious metals plating.

TABLE 2-2

OPTIONAL MASS-BASED PRETREATMENT STANDARDS

Pollutant or Pollutant Property	PRETREATMENT STANDARD (mg/sq m-operation)			
	SUBCATEGORIES A, B, D, E, F, G		PRINTED CIRCUIT BOARD MANUFACTURING	
	Maximum for Any 1 Day	Average of Daily Values for 30 Consecutive Days Shall Not Exceed	Maximum for Any 1 Day	Average of Daily Values for 30 Consecutive Days Shall Not Exceed
CN, Total	29	9	67	20
Cu	176	70	401	160
Ni	160	70	365	160
Cr	273	98	623	223
Zn	164	70	374	160
Pb	23	12	53	27
Cd	47	20	107	45
Total Metals[1)]	410	195	935	445
Silver[2)]	47	20	-	-

NOTES:

1) "Total metals" is defined as the sum of the concentration of copper, nickel, total chromium and zinc.

2) The silver pretreatment standard applies to Subpart B, precious metal plating.

TABLE 2-3

OPTIONAL PRETREATMENT STANDARDS

Pollutant or Pollutant Property	PRETREATMENT STANDARD (mg/l) Maximum for Any 1 Day	Average of Daily Values for 30 Consecutive Days Shall Not Exceed
CN, Total	0.8	0.23
Pb	0.6	0.3
Cd	1.2	0.5
TSS	20.0	10.0
pH	Within the range 7.5 to 10.0	

SECTION III

INTRODUCTION

AUTHORITY

Section 307(b) of the Act requires the administrator to establish pretreatment standards for existing and new sources for incompatible pollutants introduced into publicly owned treatment works (POTWs).

APPROACH TO PRETREATMENT STANDARDS

The standards proposed in this document were developed in the following manner. The overall electroplating point source category was first studied for the purpose of determining whether separate standards were appropriate for different subcategories within the point source category. This analysis resulted in the division of the electroplating category into seven subcategories: electroplating of common metals, electroplating of precious metals, anodizing, coatings, chemical etching and milling, electroless plating and printed circuit board manufacturing.

The electroplating category was initially investigated to determine pollutant discharge rates in each subcategory. The printed circuit board (sometimes called printed board) industry was known to have somewhat different wastes than the remainder of the electroplating category and was subsequently investigaged to compare pollutant discharge rates, composition, and water uses in this subcategory to those from the remaining electroplating subcategories. This comparison indicated that there were higher pollutant discharges for some parameters and higher water uses in printed circuit board manufacturing than in the remaining electroplating subcategories. Thus, printed circuit board manufacturing is considered a separate subcategory in the electroplating category, and further subdivision of printed circuit board manufacturing is not required. Once the pollutant discharges were analyzed, the raw waste characteristics for each subcategory were then identified. This included an analysis of 1) the source and volume of water used and the sources of wastes and wastewaters, and 2) the constituents of all contact process wastewaters including toxic constituents and other constituents which result in taste, color and odor in water or affect aquatic organisms. From this analysis, the constituents of wastewaters which should be subjected to standards of performance were identified.

The full range of control and treatment technologies existing within the electroplating category was then identified. In evaluating this technology, various factors were considered. These included the total cost of application of the technology in relation to the effluent reduction benefits to be achieved, the age of equipment and facilities

involved, the processes employed, the engineering aspects of the application of various types of control techniques, process changes and non-water quality environmental impact (including energy requirements).

Sources of Industry Data

Data on electroplating and related processes were obtained from literature studies and inquiries to federal and state environmental agencies, plating materials suppliers, trade associations, and the manufacturers themselves. These contacts are summarized in Table 3-1 and discussed below.

Literature Study - Published literature in the form of books, periodicals, reports, papers, and promotional material was examined and is presented in a detailed bibliography in Section XIV. The material researched covered manufacturing processes used in the industry, water use and percent recycling, waste treatment technology, pollutant characteristics and economic data. This information provided considerable insight into the plating industry, provided background against which to categorize the industry, and provided a list of some of the plants engaged in this industrial area.

Federal and State Contacts - All EPA regional offices and some state environmental agencies were contacted to obtain permits and monitoring data on plants contacted that were engaged in electroplating and related processes.

Plating Materials Suppliers and Manufacturers - Two major plating material suppliers and manufacturers were visited to gather information on the chemistry of plating baths, the pollutional aspects of the chemicals in baths, and the application of baths. In addition, another 38 plating material suppliers and manufacturers were contacted to obtain information on the chemicals in their baths.

Trade Association Contacts - Pollution abatement meetings of several trade and professional associations were attended.

Table 3-1

Data Source Summary

Data Source	
Literature Sources	224
EPA Regional Offices	10
State and Territories (contacted only when regional data was not available)	11
Plating Materials Suppliers	40
Companies (Plants) Contacted & Considered for This Study	542
Companies Visited for Data Verification	82
Seminars	1

A general meeting of the Institute of Printed Circuits was attended at which time the objectives of this program were outlined, and specific effluent information from printed circuit manufacturers was solicited. No significant response to this request was received.

Seminar - A seminar on printed circuits was attended. At this seminar, state-of-the-art technology, particularly in the area of additive and semi-additive circuitry, was presented.

Plant Survey and Evaluation - A number of sources were used to find prospective companies to establish a data base for the electroplating category. Among these sources were prior environmental studies done on the subject, state and local agencies, literature studies, and trade associations. Based on information from these sources, a total of over 500 plants were contacted by telephone or letter.

All of the plants were initally contacted by telephone using standard interview forms to guide the telephone conversation. Those that were involved in electroplating and whose personnel were agreeable to filling out a data collection portfolio were sent a portfolio. It has sections for general plant data, specific production process data, waste management process data, raw and treated wastewater data, waste treatment cost information, material finishing line data, and chelating agent information.

The criteria involved in selecting plants for sampling visits from the telephone contacts were:

1. Electroplating or related manufacturing processes should represent a large percentage of the plant's effluent discharge.

2. The physical layout of plant plumbing should facilitate segregation of the wastewater under study. This was necessary to avoid interference of wastes from other manufacturing operations.

3. The plant must have adequate waste treatment control technology in place.

4. The mix of plants visited should contain both direct dischargers and indirect dischargers.

5. The selected plants should provide a representative geographical distribution to avoid a data base that concentrates on a unique geographical condition.

6. The printed board plants visited should use a variety of chelating agents.

As stated, over 500 plants were contacted by telephone or letter. Data from a large number of the companies were inadequate for complete analysis, leaving an analyzable data base of 196 electroplating facilities. A summary of the plant data base is presented in Table 3-2. The companies in each subcategory of the data base for the industry are not mutually exclusive since some companies have operations in more than one subcategory.

TABLE 3-2

CHARACTERISTICS OF THE DATA BASE

SUBCATEGORY	NO. OF PLANTS
A. Electroplating of Common Metals	118
B. Electroplating of Precious Metals	39
D. Anodizing	26
E. Coatings	46
F. Chemical Etching and Milling	69
G. Electroless Plating	28
H. Printed Circuit Board Manufacture	14

The on-site evaluations consisted of two major activities; collection of technical information and water sampling and testing. The technical information gathering effort centered around a review and completion of the data collection portfolio. In addition to this, the following specific technical areas were studied during the visitation.

1. Rinsing operations and their effect on water use and waste characteristics.

2. Water conservation techniques.

3. Overall performance of the waste treatment system and future plans or changes anticipated.

4. Current discharge limitations under which the plant is operating and any difficulties in meeting them.

5. Particular pollutant parameters which plant personnel feel will be found in the waste stream.

6. Any problems or situations peculiar to the plant being visited.

In addition, the following areas were reviewed during visits to electroless plating and printed board plants:

1. Chelating agents; their applications and their effects on waste treatment.

2. Masking and its effect on dragout.

3. Through-hole plating and its effect on dragout.

The wastewater collection at the visited plants consisted of a composite sampling program done over two or three days. Prior to the sampling visit, all available data, such as layouts and diagrams of the selected plants' manufacturing processes and waste treatment facilities, were reviewed. Representative sample points were selected such as effluents from plating rinse tanks as well as total raw wastes entering treatment systems and the final effluents. Finally a detailed sampling plan showing the selected sample points and the overall sampling procedure was generated and reviewed.

Composite samples were taken at each sample point for two or three consecutive days. A minimum of four grab samples were obtained and composited by flow proportioning over each eight-hour period. When sampling large batch tanks with fill times greater than two hours, well-mixed grab samples were taken at predetermined intervals.

Samples were subjected to three levels of analysis depending on the stability of the parameters to be analyzed. These levels were: on-site analysis, local laboratory analysis, and central laboratory analysis. On-site analysis, performed by the sampler at the facility, determined flow rate, pH, and temperature. Three liters of water from each sample point were delivered to a laboratory in the area of the subject plant and analyzed for total cyanide, cyanide amendable to chlorination, and phosphorus. This analysis was performed by these local laboratories within a 24 hour period after the composite sample was prepared. The remainder of the wastewater was shipped to a central laboratory where analysis was performed within seven days for silver, gold, cadmium, hexavalent chromium, total chromium, copper, iron, fluorides, nickel, lead, tin, zinc, total suspended solids, and total dissolved solids as appropriate. Analysis for certain special parameters such as palladium and rhodium was performed only if the facility being sampled utilized such materials in their plating lines. In addition, samples from electroless plating plants were also analyzed for the chelating agents which were being used by the plant. The acquisition, preservation, and analysis of the water samples was performed in accordance with methods set forth in 40 CFR Part 136.

One of the principal areas of interest in the study of printed board manufacture was the use of chelating agents in electroless plating solutions. All available data concerning these chelating agents were solicited from the facilities under study, and wastewater from the sample points where chelating agents might be found was analyzed. In

addition to the sampling and analysis described above, special samples were obtained from a few select plants. These samples were taken from the rinses in the surface preparation section of the plating lines. Rinse samples were taken from the rinse immediately following the first alkaline cleaning process and acid cleaning process in the line. These samples were a one time grab type. The alkaline rinse sample was analyzed for phosphorus, basis metal, oil and grease, total dissolved solids, and total suspended solids. The acid rinse sample was analyzed for the same constituents excluding phosphorus.

Finally, special tests were conducted at several plants to determine the dragout characteristics in the printed board industry. Different combinations of boards (with and without holes, and with and without masking) were run through actual plating lines to determine the effect of masking and holes upon dragout.

Utilization of Industry Data

Data collected from the previously described sources were used throughout this report. The following paragraphs discuss the application of this information in Sections III through XII.

Section III: Introduction - Industry data are used in the last part of this section to describe the seven regulated subcategories of the electroplating industry. These subcategories are electroplating of common metals, electroplating of precious metals, anodizing, coatings, chemical etching and milling, electroless plating and printed board manufacturing. This subdivision is based on the fact that distinctly different production processes are performed in each of the subcategories even though these subcategories are not mutually exclusive subdivisions of the electroplating point source category. These subcategory descriptions provide an overview of the industry in the area of production processes and product descriptions. In describing electroless plating, particular attention is focused on the use of chelating agents in these plating baths since their property of holding plating metals in solution during the plating process inherently inhibits the precipitation of these metals in waste treatment facilities.

Section IV: Industry Categorization - Seven subcategories are established to cover the entire industry, one for common metals electroplating, another for precious metals, a third for electroless plating of common and precious metals, a fourth for anodizing, a fifth for coatings, a sixth for chemical milling and etching, and a seventh for printed board manufacture. Information used for selection is derived from actual plant visits and from data collection portfolios received from plants contacted but not visited. A concentration basis for limitations, as well as an optional operation-processed area basis for limitations, is selected following a review of several industry

characteristics that potentially relate to pollutant discharges including: processed area, number of employees, power consumed, number of parts processed, and effluent discharge destination.

Section V: Waste Characterization - The raw waste loadings presented are based entirely on an analysis of raw waste samples taken from contacted plants because published data were fragmented and incomplete. The raw waste data are based on an analysis of wastewater samples taken downstream of manufacturing operations, and upstream of any treatment. The waste characterization is common to both direct and indirect discharge electroplating facilities since wastes are dependent only upon the production processes performed.

Section VI: Pollutant Parameters - Based on analysis of both raw waste data and effluent data collected from the contacted plants, pollutant parameters requiring limitations were selected. This selection required that two primary criteria be met: first, the pollutant nature of the parameter must be significant; and second, it must be discharged at a significant level.

Section VII: Treatment Technology - Treatment technologies observed during plant visits and described in the literature are discussed in three main areas. The first describes inplant techniques in the area of rinsing, good housekeeping, chemical recovery, bath regeneration, and bath recycling. The second presents the performance of individual pieces of waste treatment equipment. The third section concerns the system performance of groups of such equipment. Most of the equipment descriptions were derived from the literature and supplemented by plant data analysis. Where this information was inadequate, equipment makers were contacted directly. End-of-pipe and in-line system descriptions are based on an analysis of the treatment techniques currently being used or installed as observed during the plant visits.

Section VIII: Economics - The wastewater economics data presented were obtained from the waste treatment equipment manufacturing industry and were applied with the aid of a computer. The basic program logic allows the program user to vary both the types of unit wastewater treatment processes to be used in the waste treatment system and the manner in which the processes are interconnected. Each unit process is described in a separate subroutine which sizes the unit, calculates its performance, and estimates the total investment and annual costs associated with the process. At the end of the system iteration, process costs are summed, and auxiliary costs are estimated. The computer cost estimates were compared to many actual plant wastewater treatment installations and vendor quotes, and were consistently within 20 percent of actual cost.

The technologies identified in Section VII were then input to a computer to calculate costs and performance. Both single unit

processes and typical end-of-pipe and in-line treatment systems were described. The program was executed several times for each unit process and overall system, each time utilizing a different raw wastewater flow rate. These various flow rates provided a relationship between plant production rate and estimated costs of water pollution control.

Section XII: Effluent Limitations - The derivation and formulation of pretreatment limitations are discussed in detail in Section XII.

DESCRIPTION OF THE ELECTROPLATING POINT SOURCE CATEGORY

The industrial operations covered by this document include those subcategories of the electroplating category dealing with electroplating of common and precious metals, anodizing, coating, chemical etching and milling, electroless plating and printed board manufacturing. It is estimated that a total of approximately 13,000 companies are engaged in metal plating in the United States with about 3400 of these companies being independent (job) platers. The majority of the plating facilities are captive shops, i.e., facilities plating their own work. Department of Commerce data indicate the annual value added by job plating shops may exceed $2,000,000,000, and the annual value added by the captive sector is estimated to be an additional $10,000,000,000.

Electroplating facilities vary greatly in size and character from one plant to another. A single facility for plating individual parts formed by stamping, casting, and machining, may employ plating or processing solutions (excluding water rinses) ranging in volume from less than 400 liters (100 gallons) to more than 20,000 liters (5300 gallons). The area of the products being plated in these facilities varies as much as three orders of magnitude, from less than 10 to more than 1000 sq meters/day (100 to 10,000 sq ft/day). The power consumed by a single facility varies from a few kwh/day to as much as 20,000 kwh/day. Products being plated vary in size from less than 6.5 sq cm (1 sq in) to more than 1 sq m (10 sq ft) and in weight from less than 30 g (1 oz) to more than 9000 kg (10 tons). Continuous strip and wire are plated in some plants on a 24-hour/day basis. Some companies have capabilities for electroplating ten or twelve different metals and alloys, but others specialize in just one or two. Because of differences in character, size and processes, facilities are custom tailored to the specific needs of each individual plant.

Electroplating applies a surface coating typically by electrodeposition to provide corrosion protection, wear or erosion resistance, anti-frictional characteristics or decorative purposes. The electroplating of common metals includes the processes in which a ferrous or nonferrous basis material is electroplated with copper, nickel, chromium, zinc, tin, lead, cadmium, iron, aluminum or

combinations thereof. Precious metals electroplating includes the processes in which a ferrous or non-ferrous basis material is plated with gold, silver, palladium, platinum, rhodium, or combinations thereof.

Electroless plating on metals is an integral part of a number of industries, such as, aircraft, shipbuilding, automotive and heavy machinery. It is associated, in general, with industries whose products have to withstand unfavorable conditions or significant wear and abrasion. Electroless plating on plastics for both functional and decorative purposes is most prevalent in some specific industries: automotive, furniture, appliance and electronics.

Anodizing and coating processes (chromating, phosphating, metal coloring) provide a surface coating on a metal substrate. These surface coatings provide corrosion protection, wear or erosion resistance, electrical conductivity, a pleasing appearance or other special surface characteristics. Chemical etching and milling bring about a specific amount of metal removal through chemical dissolution of the basis material.

A plating line usually is a sequence of tanks in which one or more coatings are applied or a basis material is removed. A process is the accumulation of steps required to bring about a plating result. A rinse is a step in a process used to remove dragout from the work following immersion in a process bath. A rinse may consist of several steps such as successive countercurrent rinsing or hot rinsing followed by cold rinsing.

Conceptually, an electroplating line may be broken down into three steps; surface preparation involving the conditioning of the basis material for plating, actual application of the plate and the post-treatment steps. This breakdown is presented in Figure 3-1. Each of these steps are covered in the following pages. Also included is a separate subsection on chelating agents which are an integral component in electroless plating baths but which also have a uniquely negative effect on waste treatment systems.

Electroplating

The electroplating processes apply a surface coating for functional or decorative purposes. In electroplating, metal ions in either acid, alkaline or neutral solutions are reduced on cathodic surfaces, which are the workpiece being plated. The metal ions in solution are usually replenished by the dissolution of metal from anodes or small pieces contained in inert wire or expanded metal baskets. Replenishment with metal salts is also practiced, especially for chromium plating. In this case, an inert material must be selected for the anodes. Hundreds of different electroplating solutions have

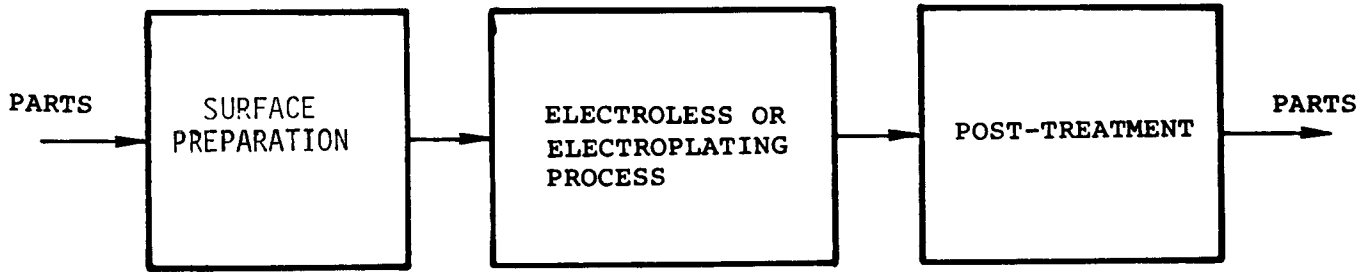

FIGURE 3-1 CONCEPTUAL ARRANGEMENT OF THE PLATING PROCESS

been adopted commercially, but only two or three types are utilized widely for any particular metal or alloy. Cyanide solutions are popular for copper, zinc, brass, cadmium, silver and gold, for example, yet non-cyanide alkaline solutions containing pyrophosphate or another agent have come into use in recent years for zinc and copper. Zinc, copper, tin and nickel are plated with acid sulfate solutions, especially for plating relatively simple shapes. Cadmium and zinc are sometimes electroplated from neutral or slightly acid chloride solutions.

The electroplating process is basically an oxidation-reduction reaction. Typically, the part to be plated is the cathode, and the plating metal is the anode. Thus, to plate copper on zinc parts, the zinc parts are the cathodes, and the anode is a copper bar. On the application of electric power, the copper bar anode will be oxidized, dissolving it in the electrolyte (which could be copper sulfate):

$$Cu = Cu^{+2} + 2e^{-}$$

The resulting copper ions are reduced at the cathode (the zinc part) to form a copper plate:

$$Cu^{+2} + 2e^{-} = Cu$$

With some exceptions, notably chromium plating, all metals are usually electroplated in a similar manner. In chromium plating, the typical anode material is lead, and the chromium is supplied to the plating baths as chromic acid.

The two most common methods for plating parts are in barrels or on racks. Barrel plating is used for small parts that tumble freely in rotating barrels. Direct current loads up to several hundred amperes are distributed to the parts being plated. Parts may be rack plated by attaching them to plastic coated copper frames designed to carry current equally to a few hundred small parts, several medium-sized shapes or just a few large products through spring-like rack tips affixed to the rack splines. Racks fabricated for manual transfer from cleaning, plating, and rinsing tanks usually hold workpieces totaling 0.5 to 1 sq m (5 to 10 sq ft) in area. Larger racks for holding heavier parts are constructed for use with mechanical hoist and transfer systems. Mechanized transfer systems for both barrels and racks, which range in cost from $50,000 to more than $1,000,000 are being utilized for high-volume production involving six to thirty sequential operations. In some instances, dwell time and transfer periods are programmed on magnetic tape or cards for complete automation. Facilities for plating sheets will be in the higher end of this cost range.

Following are descriptions of the various surface preparation and post-treatment steps involved with electroplating along with description of the electroplating processes themselves.

Electroplating Processes - Techniques for electroplating aluminum, cadmium, chromium, copper, gold, indium, iron, lead, palladium, platinum, rhodium, ruthenium, silver, tin and zinc are described below.

Surface Preparation

Surface preparation involves cleaning, descaling, degreasing, and other processes which prepare the basis material for plating.

Cleaning involves the removal of oil, grease and dirt from the surface of the basis material and may be accomplished in any of several ways. These include solvent cleaning, alkaline cleaning (both non-electrolytic and electrolytic alkaline cleaning), emulsion cleaning, ultrasonic cleaning, and acid cleaning.

Solvent cleaning of metals is classified as either hot cleaning such as vapor degreasing or cold cleaning, which covers all solvent cleaning near room temperature. Vapor degreasing, which is performed in specifically designed equipment that maintains a nonflammable solvent at its boiling point, is used to clean metal parts and is very effective in removing lubricants high in non-saponifiable oils or sulfurized or chlorinated components as well as in flushing away soluble soil. In cold cleaning, the solvent or mixture of solvents is selected based on the type of soil to be removed. For some parts, diphase cleaning provides the best method of cleaning where soil removal requires the action of water and organic compounds. This approach uses a two layer system of water soluble and water insoluble organic solvents. Diphase cleaning is particularly useful where solvent-soluble and water-soluble lubricants are used, where the part cannot be heated and when heat tends to "set" the soil.

Alkaline cleaning is used to remove oily soils or solid soil from workpieces. The detergent nature of the cleaning solution provides most of the cleaning action with agitation of the solution and movement of the workpiece being of secondary importance. Alkaline cleaners are classified into three types: soak, spray, and electrolytic. Soak cleaners are used on easily removed soil. This type of cleaner is less efficient than spray or electrolytic cleaners. Spray cleaners combine the detergent properties of the solution with the impact force of the spray which mechanically loosens the soil. A difficulty with spray cleaning is that to be effective the spray must reach all surfaces. Another problem is that the detergent concentration is often lessened because of foaming. Electrolytic cleaning produces the cleanest surfaces available from conventional

methods of alkaline cleaning. The effectiveness of this method results from the strong agitation of the solution by gas evolution and oxidation-reduction reactions that occur during electrolysis. Also, certain dirt particles become electrically charged and are repelled from the surface. Direct current (cathodic) cleaning uses the workpiece as the cathode, while for reverse current (anodic) cleaning the workpiece is the anode. In periodic reverse current cleaning, the current is periodically reversed from direct current to reverse current. Periodic reverse cleaning gives improved smut removal, accelerated cleaning and a more active surface for subsequent plating.

Emulsion cleaners consist of common organic solvents dispersed in an aqueous medium by emulsifying agents. The various types of emulsion cleaners are classified by the stability and number of phases. The stable single phase cleaner requires no agitation to maintain the dispersion of the discontinuous phase throughout the continuous phase. The unstable single phase requires agitation to maintain a uniform dispersion of the discontinuous phase.

Ultrasonic energy is finding increased use for the agitation of cleaning solutions. Although it is more expensive to install, there are substantial savings in labor and time. Ultrasonic cleaning is used to remove difficult inorganic and organic soils from intricate parts. Acid cleaning is used to remove oxides that are formed on the metal surfaces prior to plating. The removal involves the dissolution of the oxide in an acid. Sulfuric acid is the most common cleaning acid with hydrochloric and phosphoric acids also being used. The oxide removal rate is increased by an increase in temperature, acid concentration and degree of agitation.

Salt Bath Descaling - Molten salt baths are used in a salt bath - water quench - acid dip sequence to clean hard-to-remove oxides from stainless steels and other corrosion-resistant alloys. The work is immersed in the molten salt (temperature range from 400° C - 540° C), water quenched, and then acid dipped. Oxidizing, reducing and electrolytic baths are available and a particular selection is dependent on the oxide to be removed.

A typical electroplating surface preparation sequence is shown in Figure 3-2. The first step (alkaline soak) removes oil and grease from the surface. The acid cleaning removes oxide and scale and is followed by a rinse. The subsequent electrolytic alkaline cleaning gives the cleanest surface obtainable from conventional alkaline methods. The final acid dip removes light oxide films and activates the surface prior to electroplating.

1. Aluminum Electroplating - Application of aluminum on a commercial basis is limited. It has been used for coating uranium and steel strip and electroforming.

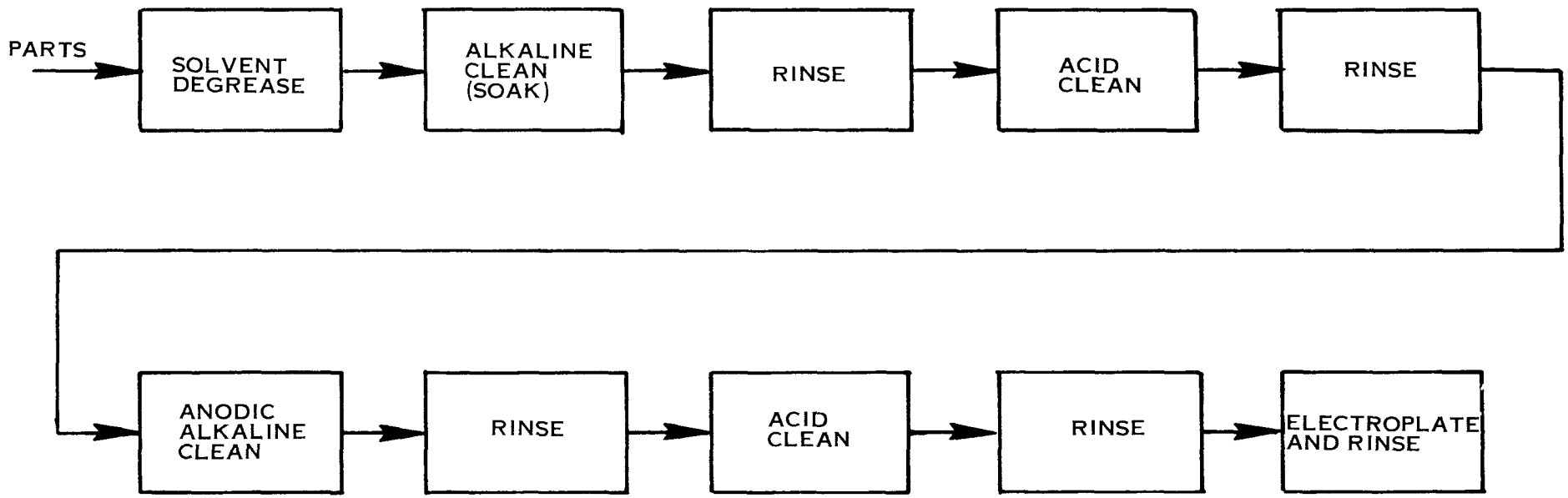

FIGURE 3-2 TYPICAL ELECTROPLATING SURFACE PREPARATION SEQUENCE

Because it is more reactive than hydrogen, aluminum cannot be plated from aqueous solutions or any solution containing acidic hydrogen. Only plating from a hydride bath with the basic ingredients of diethyl ether, aluminum chloride and lithium aluminum hydride has had any commercial applications.

2. Cadmium Electroplating - Cadmium electroplating provides a corrosion protection coating over the basis material. Iron and steel are the most commonly used basis materials. Since cadmium is relatively high priced, only thin coatings are applied. It is sometimes used as an undercoating for zinc. Cadmium plating is often used on parts consisting of two or more metals to minimize galvanic corrosion. Cadmium cyanide baths are by far the most popular because they cover completely and give a dense, fine-grained deposit which can be made very lustrous by the use of stable brighteners.

3. Chromium Electroplating - Chromium electroplating solutions contain chromic acid and silicate or fluoride ions. Three basis materials account for the bulk of the chromium plated work: steel, nickel-electroplated steel, and nickel-electroplated zinc. Solutions containing 150 to 400 g/l of chromic acid are the common baths for electroplating 0.0002 mm to 0.10 mm (0.000008 to 0.00040 inch) of decorative chromium or hard chromium (for resisting wear) on steel and aluminum. Unlike the copper and nickel plating processes which utilize soluble copper or nickel anodes to replenish the solution the metal deposited on the work-pieces, chromium electroplating processes always use insoluble lead alloy anodes. Thus, some portion of the chromic acid added regularly for maintenance is consumed by reduction to chromium metal at cathode surfaces.

4. Copper Electroplating - Copper is electroplated from several types of baths. Among these baths are alkaline cyanide, acid sulfate, pyrophosphate, and fluoborate, which are prepared with the corresponding copper salt. The cyanide solutions contain sodium carbonate and may also contain sodium hydroxide or sodium potassium tartrate. All four types may also contain a small amount of an organic chemical for refining the grain or brightening the plate. Cyanide solutions are used extensively for copper electroplating but acid copper solutions have been adopted for plating large numbers of steel, plastic, and zinc alloy products. Steel and zinc are customarily plated first in a cyanide strike bath to insure good electroplate adhesion.

Alloyed forms of copper also find use in electroplating, the most common being brass and bronze. Brass, a combination of copper and zinc, is often used as a decorative plate on furniture hardware. Several types of bronze solutions including copper-tin, copper-cadmium and copper-zinc are utilized primarily as decorative finishes.

5. Gold Electroplating - Gold electroplated surfaces not only provide decorative finishes and corrosion protection, but are also important in providing electrical contact surfaces, bonding surfaces and electroformed conductors. Plating baths have been developed for each of these uses. Four types of gold baths are used. Three of these are cyanide baths - unbuffered alkaline with a pH range of 8.5 to 13, acid buffered with a pH range of 3 to 6, and a neutral buffer with a pH range of 6 to 8.5. The fourth is noncyanide.

6. Indium Electroplating - Indium electroplating is used in the manufacture of aircraft engine bearings. Corrosion of the originally plated cadmium-silver-copper bearings is reduced by an indium over-layer and heat treating. Indium is often alloy plated with copper, tin, lead, cadmium, nickel, bismuth or rhodium.

Initially, indium baths were composed of cyanide and sugar. Today the sulfate bath is the most widely used along with alkaline, fluoborate, sulfamate, chloride, perchlorate and tartrate baths.

7. Iron Electroplating - The electroplating of iron is used for certain specialized purposes such as electroforming and buildup of worn parts. Since iron does not alloy with solder, this has lead to iron plating of soldering tips. While there are several difficulties in the maintenance of an iron electroplating line, the iron electroplating solutions are comparatively stable and simple to operate. Special noncorrosive equipment is needed to heat and agitate the plating bath. Also, care must be taken that the plating bath does not oxidize. However, these disadvantages may be offset by the great abundance of low cost iron. Iron may be deposited as a hard and brittle or soft and ductile coat. Almost all iron is plated from solutions of ferrous salts at low pH's. The most common baths contain sulfate, chloride, fluoborate and sulfamate.

8. Lead Electroplating - Lead is most resistant to hydrofluoric and sulfuric acids and is used for protective linings as well as coatings on nuts and bolts, storage battery parts and bearings. Lead is often an undercoat for indium plating. Lead-tin and lead-antimony alloys are used. Solder plating is a 40/60 lead-tin alloy which is widely used in the electronics field.

Fluosilicate and fluoborate baths are the most widely used. The fluoborate bath is more expensive, but it gives finer grained denser deposits, adheres better to steel and will not decompose as readily.

9. Nickel Electroplating - Nickel is electroplated from several baths; among these are Watts (sulfate-chloride-boric acid), sulfamate, all chloride, and fluoborate baths. Each type of solution is prepared with the corresponding nickel salt, a buffer such as boric acid and a small concentration of a wetting agent. A small amount of another

organic chemical may be added to brighten the deposits or control other properties. Nickel is extensively electroplated in a three-metal composite coating of copper, nickel, and chromium. Nickel is also electrodeposited on steel for decorative-protective finishes and on other materials for electroforming. In these applications, nickel electroplating is preceded by cleaning and activating operations in a sequence selected for a specific basis material.

Organic agents that refine the grain size of the deposit and brighten the plate are added to all nickel plating baths adopted for sequential nickel-chromium plating. Proprietary agents are supplied by metal finishing supply companies that have developed stable, effective chemicals for insuring mirror-like, corrosion-protection deposits requiring no buffing.

10. Platinum Metals Electroplating - Of the six metals in the platinum group only platinum, rhodium, and palladium are electroplated to any extent. Of these, rhodium is most often deposited. Decorative coatings for silverware, jewelery, and watches are very thin (0.1 um) and are used to prevent tarnish and excessive wear of silver and to enhance the color of gold and gold-filled products. When the basis metal is not a silver or a gold alloy an undercoat of nickel is generally used. Coatings 25 um thick (0.001 inch) are used for wear and corrosion resistance in the electronics industry and provide a surface of high optical reflectivity.

Platinum is electroplated on titanium and similar metals which are used as insoluble anodes in other plating operations (e.g. rhodium and gold). Electroplated platinum is used as an undercoat for rhodium plate. Ruthenium electroplating is used on high intensity electrodes to improve electrical contact. Commercial electroplating of osmium and iridium are believed to be non-existent.

Rhodium electroplating baths are supplied as phosphate or sulfate concentrates. The only additions made to the diluted concentrate are phosphoric and/or sulfuric acids at concentrations of 25 to 75 ml per liter of plating bath. A rhodium conentration of 2.0 g/l is used for decorative coatings. Concentration is increased to 10 to 20 g/l for achieving thicker deposits.

The palladium content in plating solutions ranges from 2.5 to 10 g/l in the form of an amino nitrite complex. Other constituents are 11 g/l sodium nitrite and 40 ml/l of concentrated ammonium hydroxide. Palladium deposition has been accomplished from chloride or bromide solutions and from a molten cyanide bath.

11. Silver Electroplating - The use of silver electroplating is expanding in both the engineering and the decorative fields. Silver is typically electroplated in two types of baths, a conventional low

metal bath and the high speed bath with a much higher silver content. Most baths are now based on potassium formulations because of high plating speeds, better conductivity, increased tolerance to carbonates and smoother deposits.

12. Tin Electroplating - In terms of tonnage of product produced, continuous tin electroplating of coil steel represents the largest application of electroplating in the world. Tin is resistant to corrosion and tarnish, solderable, soft and ductile. These properties of tin make it excellent for food handling equipment, electronic components and bearing surfaces where lubricity to prevent seizing and scoring is desired.

Tin electroplate can provide a mat or bright deposit. The common baths of alkaline stannate and acid fluorborate produce a mat finish while the acid sulfate process can result in either type of deposit. Commonly, mat finishes are brightened by a post-plating operation of melting the deposit. This method is call "reflowing".

13. Zinc Electroplating - Zinc is electroplated in (a) cyanide solutions containing sodium cyanide, zinc oxides or cyanide and sodium hydroxide; (b) non-cyanide alkaline solutions prepared with zinc pyrophosphate or another chelating agent such as tetrasodium pyrophosphate, sodium citrate or the sodium salt of ethylenediamine tetraacetic acid; (c) acid or neutral chloride baths prepared with zinc chloride and a buffer salt such as ammonium chloride; or (d) acid sulfate solutions containig zinc sulfate and a buffer salt such as aluminum chloride or sulfate. A small concentration of an organic compound such as glucose, licorice, or glycerin may be added to the chloride or sulfate baths for brightening purposes.

Post-Treatment Processes - After a deposition of a metallic coating either by electro or electroless techniques, an additional coating is sometimes applied. The function of the additional coating is to improve the metal surface for painting, lubricity, improved corrosion protection or the application of a colored finish. These post-treatment processes encompass chemical conversion coatings (chromating, phosphating and metal coloring) which are discussed later as treatment processes.

Electroless Plating

Electroless plating is a chemical reduction process which depends upon the catalytic reduction of a metallic ion in an aqueous solution containing a reducing agent, and the subsequent deposition of metal without the use of external electrical energy. It has found widespread use in industry due to several unique advantages over conventional electroplating. Electroless plating provides a uniform plating thickness on all areas of the part regardless of the

configuration or geometry of the part. This makes it possible to plate deep recesses and niches that electroplating cannot effectively reach due to current distribution problems. An electroless plate on a properly prepared surface is dense and virtually non-porous. Furthermore, certain types of electroless platings provide better hardness and corrosion protection than their electroplated counterparts.

Copper and nickel electroless plating are the most common. Others found on a smaller scale are iron, cobalt, gold, palladium, and arsenic. Because of their widespread use, nickel and copper electroless plates are described in the following paragraphs, and then the application of these plates to both metals and plastics is described.

The basic ingredients in an electroless plating solution are:

1. A source of metal, usually a salt.

2. A reducer to reduce the metal to its base state.

3. A chelating agent to hold the metal in solution (so the metal will not plate out indiscriminately).

4. Various buffers and other chemicals designed to maintain bath stability and increase bath life.

For electroless nickel plating baths, the source of nickel is a salt such as nickel chloride or nickel sulfate and the reducer is sodium hypophosphite. There are several chelating agents which can be used, the most common ones being citric and glycolic acid.

The basic plating reactions proceed as follows:

The nickel salt is ionized in water.

$$NiSO_4 = Ni^{+2} + SO_4^{-2}$$

There is then a redox reaction with nickel and sodium hypophosphite.

$$Ni^{+2} + SO_4^{-2} + 2NaH_2PO_2 + 2H_2O = Ni + 2NaH_2PO_3 + H_2 + H_2SO_4$$

The sodium hypophosphite also results in the following reaction:

$$2NaH_2P_2 + H_2 = 4P + 2NaOH + 2H_2O$$

As can be seen in the equations above, both nickel and phosphorus are produced, and the actual metal deposited is a nickel-phosphorus alloy.

The phosphorus content can be manipulated to produce different characteristics in the nickel plate.

Electroless copper plating is similar to electroless nickel plating. The source of copper is one of a variety of salts such as cupric chloride and copper sulfate. The reducer is one of a variety of agents including formaldehyde, acetaldehyde, trioxane, hydrazine and hypophosphite. Formaldehyde, however, is by far most commonly used. The chelating agent in a copper bath is usually either a tartrate (Rochelle salt) or a member of the amine family.

The copper salt is ionized in water.

$$CuSO_4 = Cu^{+2} + SO_4^{-2}$$

There is then a redox reaction with the copper and the formaldehyde to:

$$Cu^{+2} + 2H_2CO + 4\ OH^{-1} = Cu + 2HCO_2^{-1} + 2H_2O + H_2$$

The base metal copper now begins to plate out on a proper surface, that is, on a less noble metal or on a surface which has been sensitized with a catalyst. Electroless copper deposits quite readily on certain metal surfaces, but a catalyst must be used to plate copper on a non-metal.

Of particular interest among the constituents of electroless plating baths are the chelating agents. Chelation is an equilibrium reaction between a metal ion and a complexing agent characterized by the formation of more than one bond between the metal and a molecule of the complexing agent. This results in the formation of a ring structure incorporating the metal ion and thus holding it in solution. Chelating agents control metal ions by blocking the reactive sites of the metal ion and preventing them from carrying out their normal (and in many cases undesirable) reactions.

In the electroless plating processes, the purpose of the chelating agent is to hold the metal in solution, to keep it from plating out indiscriminately. Thus, the chelate can only be replaced by some material capable of forming an even more stable complex, that is, the part to be plated.

One of the drawbacks in the use of chelating agents is the difficulty in precipitating chelated metals out of wastewater during treatment. Quite often, plants which are engaged in plating activities that make use of chelating agents have treatment systems based on the precipitation and the settling out of heavy metals. Unfortunately, in the treatment system, the chelating agents continue to hold the metal in solution, and cause the chelated metal to pass through the

treatment system without precipitation and settling. In some situations, particularly with the stronger chelates, special consideration or treatment is necessary in order to remove the bound metals. Proper treatment of chelates is discussed in the system portion of Section VII.

The more common chelating agents currently being used in industry are shown in Table 3-3 along with some of their marketers and manufacturers. These chelates are divided into three main categories: amino carboxylic acids, amines, and hydroxy acids. The amino carboxylic acids and the amines are stronger, more aggressive chelates that are more difficult to break away from the metal ion. The hydroxy acids are fairly mild chelates whose bond with a metal can be broken rather easily, if necessary. These hydroxy acids are biodegradable.

Surface Preparation for Electroless Plating on Plastics - Surface preparation for electroless plating on plastics consists of cleaning and roughening or etching. Roughening can be accomplished by mechanical means such as tumbling or vapor blasting, or it can be done by chemical means such as etching. Once the plastic surface is roughened, a catalyst must be applied. All plastics which are plated need the catalyst in order for the metal deposition to occur. The catalyst application consists of deposition of a thin layer of palladium on the surface of the part. Usually, it is a two step process which is variously known as: "sensitizing", "activating", "accelerating", and "catalyzing".

Two different catalyst application methods have been employed and both are based on the interaction of stannous and palladium salts. One method involves adsorbing stannous tin on the surface, then immersing the part in palladium chloride. This reduces the palladium to the metal form and oxidizes the tin from stannous to stannic. A molecular layer of palladium metal is deposited on the surface of the part and the tin remains in the solution. The other process used for catalyst application involves the application of a mixture of stannous and palladous compounds on the part. This activator is adsorbed on the part, and a reaction takes place when the part is exposed to a solution that dissolves tin on the surface. After the catalyst is applied, the part is immersed in the electroless bath and the desired metal plates out on the palladium. After the initial layer of metal is applied it becomes the catalyst for the remainder of the plating process.

Surface preparation of plastic prior to electroless plating is shown in Figure 3-3. The production process for electroless plating on plastics is different from that used for electroless plating on metals. After cleaning with an alkaline soak cleaner, the surface is roughened or etched by an acid. Following neutralization a tin-

Table 3-3.

Common Chelating Agents - Marketers and Manufacturers

	MARKETER O MANUFACTURER X																			
	MARKETER OR MANUFACTURER ID	M1	M2	M3	M4	M5	M6	M7	M8	M9	M10	M11	M12	M13	M14	M15	M16	M17	M18	M19
HYDROXY ACIDS	Glycolic Acid																			
	Gluconic Acid				O				O	X									X	
	Citric Acid		X				O			X										
	Tartrates		O			O				X										
AMINES	tetren												X							
	trien												X							
	TBED					O														
	DPDEED					O														
	Thiourea																			
	TPA					O														
	PPDT					O														
	TPED					O						X								X
	TEA					O						X						O		X
AMINOCARBOXYLIC ACIDS	EGTA												X							
	CDTA							O					X							
	DHEG					O		X				X			X	X				
	HEIDA		O				O	X												
	DTPA						O	X				X	X			X	X			
	NTA						O	X					X							
	HEDTA	O					O	X			O	X	X			X				
	EDTA	O	O	O	O	O	O	X	O		O	X	X	X	X	X	X	O		

palladium catalyst is applied. The acceleration step dissolves the tin from the surface, allowing the part to be plated.

Surface Preparation for Electroless Plating on Metals - Surface preparation for electroless plating on metal consists of the conventional electroplating cleaning steps for metals with active surfaces such as iron, cobalt, nickel, ruthenium, palladium, osmium, iridium and platinum. In addition, the smoother the surface the better the resulting plating finish. Therefore, the parts usually undergo mechanical preparation such as honing, and chemical treatment such as acid dipping and alkaline cleaning. However, not all metals are active enough to accept electroless plating directly and, consequently, require an activation step. Surface preparation for stainless steels, aluminum base alloys, beryllium, and titanium alloys typically consists of a flash deposit of nickel to catalyze the surface for subsequent electroless deposition.

Certain materials need a galvanic initiation, normally an immersion nickel deposit. Included in this group are copper, chromium, selenium, and uranium. Material surfaces containing such metals as lead, cadmium, zinc, tin and antimony (such as soldered components, galvanized products or cadmium-zinc plated items) are not amenable to electroless plating in that they interfere with all electroless plating activity. Thus, when electroless plating these materials, it is necessary to use a preplate of a material that is autocatalytic. A copper strike is frequently used which then can be surface activated and electroless plated.

Surface preparation of metals prior to electroless plating is shown in Figure 3-4. The first two steps (vapor degrease and alkaline clean) remove oil and grease from the surface. The acid cleaning removes oxide and scale and is followed by a rinse. The subsequent alkaline cleaning (electrolytic) gives the cleanest surface obtainable from conventional methods. The final acid cleaning removes light oxide films and activates the surface prior to flash electroplating. After the electroplate, which acts as a catalyst, the part is electroless plated.

Electroless Plating on Metals - Electroless plating on metal is associated in general with products which have to withstand unfavorable conditions or significant wear and abrasion. Electroless nickel plating is the most widely used type of electroless plating in industry. Its primary importance is its use in protecting against corrosion and wear. Because of its corrosion protection, it is used in such areas as ship components to resist the marine atmosphere, filters, heat exchangers, pumps, holding tanks and oil field drilling equipment. An electroless nickel plate can be heat treated to hardness values not attainable with electroplated nickel and thus has a tremendous resistance to wear and abrasion. This property is useful

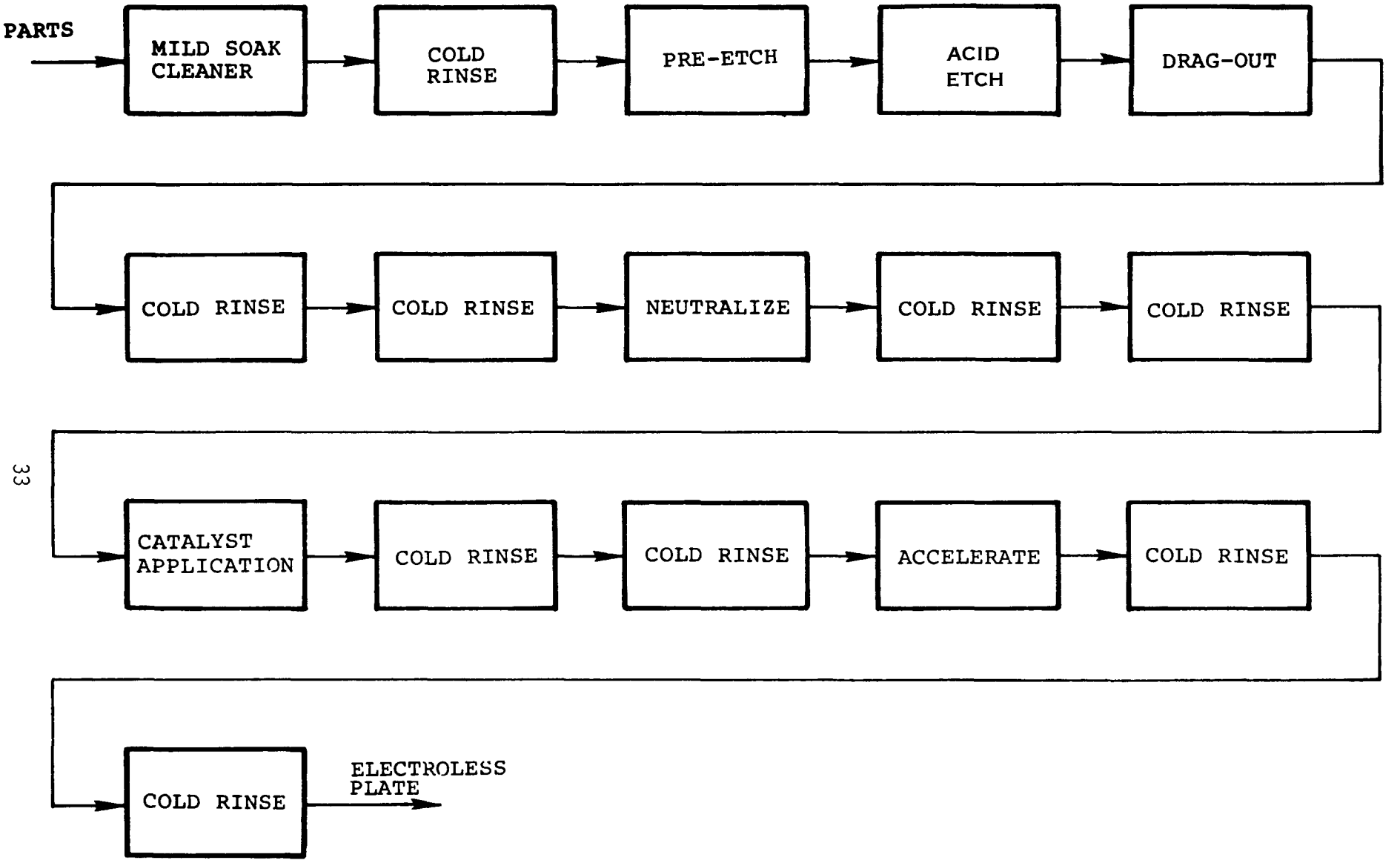

FIGURE 3-3 EXAMPLE OF ELECTROLESS PLATING ON PLASTIC—SURFACE PREPARATION SEQUENCE

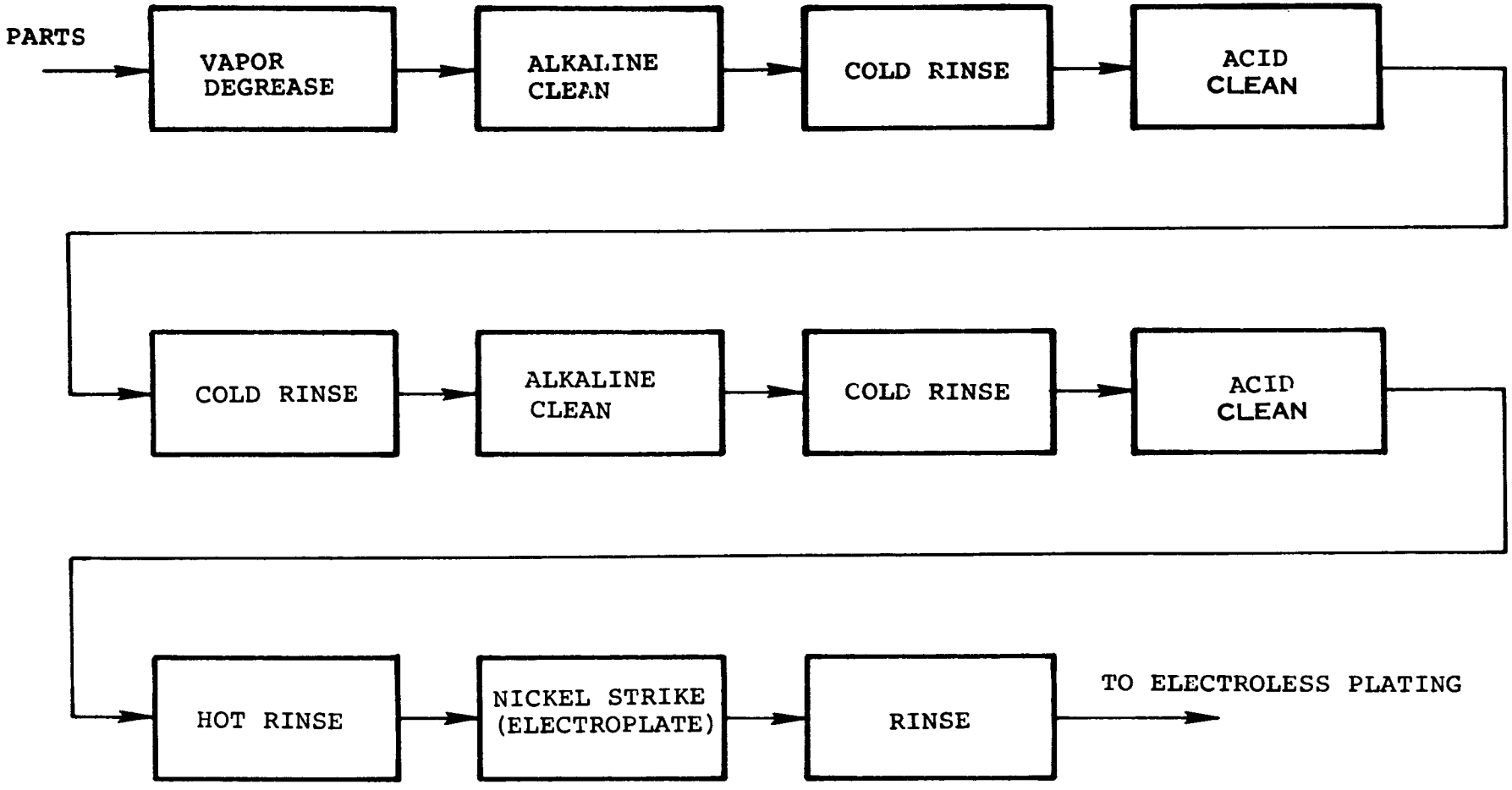

FIGURE 3-4 EXAMPLE OF ELECTROLESS PLATING ON METALS-SURFACE PREPARATION SEQUENCE

in coating hydraulic cylinders, valve inserts, friction rings, linkages, pump and fan impellers, and ink cylinders.

Electroless Plating on Plastics - During the past decade, the plating of plastics has increased significantly. Included in the industries applying such platings are the automotive, appliance, cosmetic, electrical, hardware, furniture, and plumbing industry.

Among the plastics most widely used for plating are acrylonitrile-butadiene-styrene (ABS), polycarbonate, polypropylene, polysulfone, and epoxies. ABS is a low cost, easily plated plastic which is used in automotive grilles, appliance knobs, and plumbing. Polycarbonate, whose best feature is its high impact strength, has found use in aircraft parts. Polypropylene, which has been described as having a unique blend of average properties, is the least expensive of the plastics which are plated and is used for lamps and appliance parts. Polysulfone which has good dimensional stability and high temperature tolerance, is employed in household appliances and camera housings. Epoxy resin type plastics are mostly used in the electronics industry, particularly in the production of printed boards.

An electroless nickel plate has an active surface, making it very receptive to a follow-up electroplate. Because of this, electroless nickel is used as a base coating in the plating of plastics. A large variety of follow-up electroplates and finishes are used including bronze, satin copper, satin gold, silver, bright copper, brass and black oxide. However, the usual procedure is to follow up the electroless nickel plate with copper, nickel, and then chromium electroplate. The procedure is widely used for decorative parts in the automotive, furniture, and appliance industries.

Electroless copper plating was developed primarily for deposition of copper on plastic printed boards and is still generally only used in this industry. The chemistry of electroless copper plating is similar to electroless nickel plating; only the chemicals are different.

Post-treatment Processes - The most common operation carried out after electroless plating is electroplating. Virtually all of the electroless plating done on plastics is followed by some form of electroplating operation. Although an electroless plate has superior hardness and corrosion protection characteristics, it may be covered by some coating such as a lacquer.

Anodizing

Anodizing is an electrolytic oxidation process which converts the surface of the metal to an insoluble oxide. These oxide coatings provide corrosion protection, decorative surfaces, a base for painting and other coating processes, and special electrical and engineering

properties. Aluminum is the most frequently anodized material, while some magnesium and limited amounts of zinc and titanium are also anodized.

Surface Preparation - Surface preparation for anodizing can be minor or extensive depending on the alloying elements in the basis material and the amount of oil, grease, or oxide present on the part. Figure 3-5 presents a surface preparation sequence for either chromic or sulfuric acid anodizing of aluminum. The vapor degreasing step is usually required only if the amount of oil and grease on the part is excessive. The next step is cleaning in an inhibited soak cleaner. This is the principal cleaning step for most work. Following cleaning, an oxide removal step is included only if a large amount of oxide is present on the part. The etching step provides an active surface for anodizing but also produces a smut on the surface when an alloying agent (particularly copper) is present and the etch is an alkaline type. For these situations a desmutting bath such as nitric acid is used to remove the smut. The desmutting is followed by anodizing. Preparation for anodizing of magnesium, zinc, and titanium typically consists of cleaning in an inhibited alkaline cleaner with only titanium requiring activation in a nitric- hydrofluoric acid solution.

For aluminum parts, the formation of the oxide occurs when the parts are made anodic in dilute sulfuric acid or dilute chromic acid solutions. The oxide layer begins formation at the extreme outer surface, and as the reaction proceeds, the oxide grows into the metal. The last formed oxide, known as the boundary layer, is located at the interface between the base metal and the oxide. The boundary is extremely thin and nonporous. The sulfuric acid process is typically used for all parts fabricated from aluminum alloys except for parts subject to stress or containing recesses in which the sulfuric acid solution may be retained and attack the aluminum.

Chromic acid anodic coatings are more protective than sulfuric acid anodic coatings. This is partly due to the retention of chromic acid in the coating and its relatively thick boundary layer. For these reasons, a chromic acid bath is used if a complete rinsing of the part cannot be achieved.

The characteristics of anodic coating on magnesium vary from thin coatings to give good corrosion resistance to heavy coatings for abrasion and corrosion resistance. Of the numerous anodizing solutions available, only two are in widespread use. Of these solutions, one is a combination of fluoride, phosphate, and chromic acids, and the other is a mixture of potassium hydroxide, aluminum hydroxide, and potassium fluoride.

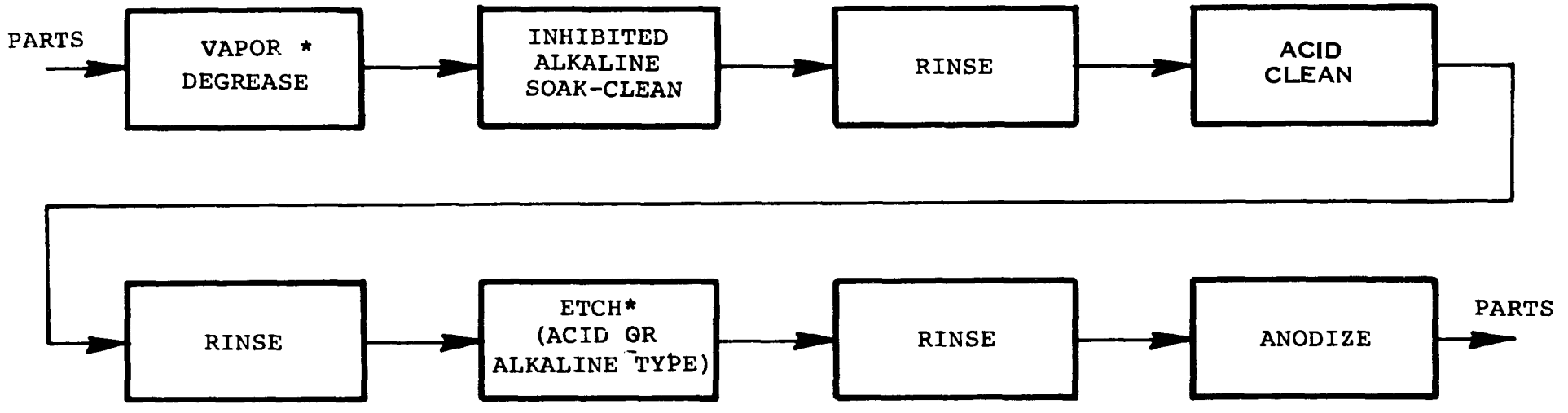

* OPTIONAL DEPENDING ON BASIS MATERIAL

FIGURE 3-5 EXAMPLE OF SURFACE PREPARATION SEQUENCE FOR ANODIZING OF ALUMINUM

Coatings

This section deals with the chemical conversion coating of chromating and phosphating, metal coloring and immersion platings. These coatings are applied to previously deposited metal or basis material for increased corrosion protection, lubricity, preparation of the surface for additional coatings, or formulation of a special surface appearance.

Surface Preparation - Surface preparation involves cleaning, descaling, degreasing and other processes which prepare the basis material for surface treatment. The number of surface preparation steps required prior to additional surface treatment depends upon the work flow sequences established in individual facilities. The surface preparation processes for coating are identical to those described earlier for electroplating. In addition to these operations, polishing is often used to obtain the desired surface prior to coloring. Mechanical polishing, electropolishing, and chemical polishing are used to obtain specific surface finishes.

Chromating - Chromate conversion coatings are protective films formed on the metal surfaces. During the process of chromating, a portion of the base metal is converted to one of the components of the film by reaction with aqueous solutions containing hexavalent chromium and active organic or inorganic compounds. Chromate coatings are most frequently applied to zinc, cadmium, aluminum, magnesium, copper, brass, bronze, and silver. The chromating solutions are generally acidic and contain chromic acid or its sodium or potassium salts, plus organic or inorganic compounds such as activators, accelerators, or catalysts. Although chromate conversion coatings can be applied by chemical or electrochemical action, the bulk of the coatings are usually applied by a chemical immersion, spray or brush treatment. Most chromate treatments used in industry employ proprietary solutions. With these processes, a wide variety of decorative and protective films ranging from colorless to iridescent yellow, brass, brown, and olive drab can be produced. The coating appearance will depend on the basis metal and the processing procedures employed. Additional coloring of the coatings can be achieved by dipping the parts in organic dye baths to impart red, green, blue, and other colors. Besides their use as protective or decorative films, chromate conversion coatings are extensively employed to provide an excellent base for paint and other organic finishes which do not adhere well to untreated metal surfaces.

Phosphating - Phosphate conversion coatings produce a mildly protective layer of insoluble crystalline phosphate on the surface of a metal. Phosphate coatings are used to a) provide a good base for paints and other organic coatings, b) condition the surfaces for cold forming operations by providing a base for drawing compounds and

lubricants, and c) impart corrosion resistance to the metal surface by the coating itself or by providing a suitable base for rust-preventative oils or waxes. Phosphate conversion coatings are formed by the immersion of iron, steel, or zinc plated steel in a dilute solution of phosphoric acid plus other reagents.

The method of applying the phosphate coating is dependent upon the size and shape of the part to be coated. Small parts are coated in barrels immersed in the phosphating solution. Large parts, such as steel sheet and strip, are spray coated or continuously passed through the phosphating solution. Supplemental oil or wax coatings are usually applied after phosphating unless the part is to be painted.

Coloring - Metal coloring by chemical conversion methods produces a large group of decorative finishes. This section covers only chemical methods of coloring in which the metal surface is converted into an oxide or other insoluble metal compound. The most common colored finishes are used on copper, steel, zinc, and cadmium.

Application of the color to the cleaned basis metal involves only a brief immersion in a dilute aqueous solution. The colored films produced on the metal surface are extremely thin and delicate. Consequently, they lack resistance to handling and the atmosphere. A clear lacquer is often used to protect the colored metal surface.

A large quantity of copper and brass is colored to yield a wide variety of shades and colors. Shades of black, brown, gray, green, and patina can be obtained on copper and brass by use of appropriate coloring solutions. The most important colors for ferrous metals are based on oxides which yield black, brown, or blue colors. A number of colors can be developed on zinc depending on the length of immersion in the coloring solution. For instance, in a solution of ammonium chlorate the color sequence is yellow, brown, violet, deep blue, and blue-black. Ammonium molybdate solutions give a gold to brown to black color sequence. Although cadmium is not a structural metal, it is used in decorative coloring as a protective deposit on ferrous metal substrates. The most important surface treatment for cadmium is chromate passivation which improves its resistance to the atmosphere and to fingerprints as well as providing color. In most instances, the color of chromate-passivated cadmium is yellow, bronze, or dark green. Black and brown colors can also be produced on cadmium. Silver, tin, and aluminum are also colored commercially. Silver is given a gray color by immersion in a polysulfide solution such as ammonium polysulfide. Tin can be darkened to produce an antique finish of pewter by immersion in a solution of nitric acid and copper sulfate. Because the colored layers on metal surfaces are so delicate, they are usually protected by a coat of lacquer applied by spraying or dipping.

Immersion Plating - Immersion plating is a chemical plating process in which a thin metal deposit is obtained by chemical displacement of the basis metal. In immersion plating, a metal will displace from solution any other metal that is below it in the electromotive series of elements.

The lower (more noble) metal will be deposited from solution while the more active metal (higher in the series) will be dissolved. A common example of immersion plating is the deposition of copper on steel from an acid copper solution.

The thickness of immersion deposits is usually of the order of 0.25 um (.00001 in) although a few processes produce deposits as thick as 2.5 to 5 um (.0001-.0002 in). This thinness limits the usefulness of immersion deposits as to applications other than corrosion protection, such as decoration or preparation for further processing such as painting or rubber bonding. The most widely used immersion plating processes are, a) tin on brass, copper, steel, or aluminum, b) copper on steel, c) gold on copper or brass, d) nickel on steel and e) zinc on aluminum.

Immersion tin plating is used to "whiten" pins, hooks, eyelets, screws, buttons, and other hardware items made of copper, brass, or steel. In addition, aluminum alloy pistons for internal combustion engines are immersion tin plated. All immersion tin plating baths for copper, brass, and steel are based on stannous chloride solutions. Immersion tin solutions contain, in addition to stannous chloride, cream of tartar (potassium bitartrate), ammonium aluminum sulfate, or sodium cyanide and sodium hydroxide.

Copper is immersion deposited on steel wire prior to drawing in order to reduce wear on the dies. Copper is deposited from an acid copper sulfate solution. A copper-tin alloy is obtained on steel wire by adding tin salts to the copper sulfate solutions.

Gold is immersion deposited on copper and brass to gild inexpensive items of jewelry. Typical immersion gold plating solutions contain gold chloride and potassium cyanide or pyrophosphate.

Post-treatment Processes

The corrosion resistance of anodic coatings on aluminum and its alloys is improved by immersion of the anodized surface into slightly acidified hot water. The sealing process converts the amorphous anhydrous aluminum oxide to the crystalline monohydrate ($Al_2O_3.H_2O$). For chromic acid anodized parts, a slight amount of chromic acid is added to the sealing bath. For sulfuric acid anodized parts 5 to 10% by weight potassium dichromate is added. Parts are rinsed and dryed after the sealing.

Anodic coatings on magnesium are sealed in ammonium acid fluoride and sodium dichromate solutions. After sealing, the parts are water rinsed and dried. This sealing neutralizes any alkali retained in the coating and provides better corrosion protection and improved paint adhesion.

Unsealed anodic coatings on aluminum are colored by immersion in a solution of organic or inorganic dyes. The depth of dye absorption depends on the thickness and porosity of the anodized surface. After rinsing, the sealing of the dye is accomplished by immersion in a hot solution of nickel or cobalt acetate.

Special surface characteristics can be imparted to chromate conversion coatings by bleaching or dyeing. Clear bright finishes are obtained by immersion in various mildly acidic or alkaline solutions. Solutions such as sodium hydroxide, sodium carbonate, or phosphoric acid are employed to eliminate the yellow coloring from the chromate film. Dyed coatings can also be applied.

After the post phosphating water rinse, phosphated parts can be rinsed in a weak chromic acid solution. The chromic acid solution neutralizes any phosphoric acid remaining on the part and improves the corrosion resistance. Following the acid rinse, parts are frequently dipped in a suitable oil, wax, or other lubricant before drying in hot air.

Chemical Milling and Etching

Chemical milling and etching processes are used to produce specific design configuration and tolerances on metal parts by controlled dissolution with chemical reagents or etchants. Included in this general classification are the specific processes of chemical milling, chemical etching, bright dipping, electropolishing, and electrochemical machining.

Surface Preparation - Surface preparation procedures for chemical milling and etching are similar to those presented for electroplating. Prior to the etch step, the basis material is usually alkaline or acid cleaned. After removal of grease, dirt, oxide, or scale from the metal surface by any of the applicable methods, parts to be chemically milled or etched sometimes have a mask applied. Areas where no metal removal is desired are masked off with an etch resistant material. Masks are applied by dip, spray, brush, roll or flow-coating, silk-screen techniques or photosensitive resists. Typically photographic techniques are used for the blanking of small intricately shaped parts or for the production of name plates, dials, and fine mesh screen. After masking, parts may be dipped in acid to activate the surface prior to chemical milling or etching.

Chemical Milling - Chemical milling is similar to the etching procedure used for decades by photoengravers, except that the rates and depths of metal removal are usually much greater. Chemical milling is especially suited for removing metal from shallow depths on formed complex shaped parts (e.g., forgings, castings, extrusions) from thin sections and from large areas.

The amount of metal removed or the depth of removal is controlled by the immersion time in the milling solutions. The metal can be removed from an entire part or restricted to selected areas by masking. Areas where no metal removal is desired are masked off. Masks are applied by dip, spray, brush, roll or flow-coating techniques. These preparatory steps were discussed in the Surface Preparation section.

Typical solutions for chemical milling include ferric chloride, nitric acid, ammonium persulfate, chromic acid, cupric chloride, hydrochloric acid and combinations of these reagents. Aluminum is milled in ferric chloride or hydrochloric acid or sodium hydroxide solutions. Copper is milled in ferric chloride, cupric chloride, chromic acid, or ammonium persulfate solutions.

Etching - Chemical etching is the same process as chemical milling except relatively small amounts (1-5 mils) of metal are removed. Bright dipping is a specialized example of the etching process. Etching to produce a pattern for printed circuit boards is discussed later in this development document in the description of the printed board subcategory.

Bright dipping is used to remove oxide and tarnish from ferrous and nonferrous materials. Bright dipping can produce a range of surface appearance from bright clean to brilliant depending on the surface smoothness desired in the finished part. A smoother surface results in a more brillant appearance.

Bright dipping solutions usually involve mixtures of two or more of sulfuric, chromic, phosphoric, nitric, and hydrochloric acids. The rate of attack on the metal is controlled by the addition of inhibiting materials. The quantity of these materials is dependent upon the metals that are to be dipped. The type and quantity of the parts to be bright dipped greatly influences the composition of the bath. For parts with simple shapes which can be easily removed from the dipping solution and quickly rinsed, fast-acting dips are used. Slow-acting dips are used for bulk loads of parts and parts with complex shapes.

Printed Board Manufacturing

Printed boards are fabricated from nonconductive board materials such as plastic or glass on which a circuit pattern of conductive metal,

usually copper, has been formed. The board not only provides a surface for the application of a conductive wiring path but also gives support and protection to the components it connects. As a means of packing and interconnecting electronic devices, printed boards find widespread use in such applications as business machines, computers, communications, and home entertainment equipment.

The total market for printed boards is about one billion dollars domestically and about two billion dollars world wide. The industry in the U.S. consists of large facilities totally involved with printed board manufacture, both large and small captive facilities, small job shops doing contract work, and speciality shops which do low volume and high precision type work. Total annual production is approximately 150 million square feet of printed boards.

This section presents details on the production methods, types of circuit boards, and the specific processes involved in producing printed boards.

Production Methods - The earliest printed boards were produced by brushing a specially formulated silver paint on a ceramic plate for the required circuit pattern. This was followed by heating at high temperatures to remove the paint vehicle and binder, leaving the deposited silver electrically conductive. Over the years, several different production methods have been employed as the overall science evolved. Presently, the industry limits itself to three main production methods (additive, semi-additive, and subtractive). Some small production facilities use offshoots of these main processes as well as some remaining processes from the past. Table 3-4 presents a comparison of the three principal production methods. The following paragraphs describe the general subtractive, additive, and semi-additive processes.

TABLE 3-4

COMPARISON OF BASIC PROCESS STEPS

	Conventional Subtractive	Semi-Additive Unclad	Fully Additive Standard
	Process sequence begins with copper clad material	Process sequence begins with unclad material	Process sequence begins with unclad material (already sensitized)
I	- Fabricate holes	Fabricate holes	Fabricate holes
	- Chemically clean	Promote adhesion	
II	- Sensitize (Catalyze surface)	Sensitize (Catalyze surface)	
	- Electroless copper flash	Electroless copper flash	
III	- Print reverse pattern	Print reverse pattern	Print reverse pattern
IV	- Electroplate copper to desired thickness	Electroplate copper to desired thickness	Electroless deposit copper to desired thickness
	- Over plate	Over plate	
	- Strip mask	Strip mask	
V	- Etch	Quick Etch	
IV	- Tab plate	Tab plate	Tab plate

I - Cleaning & Surface Preparation

II - Catalyst & Electroless Plating

III - Pattern Printing & Masking

IV - Electroplating

V - Etching

The subtractive process derives its name from the large amount of material that is removed in order to make the circuit. The simplest of the subtractive techniques is the print and etch process which begins with a board of nonconductive material, such as glass or plastic, which is clad with a copper foil. The circuit pattern is printed onto this foil in oil, cellulose, asphalt, vinyl, or resin based ink and then the board goes through an etching operation in which the area of the foil not covered by the ink is removed. Next, the ink is stripped from the foil, leaving only the desired circuit of copper on the board.

The conventional subtractive process shown in Figure 3-6 begins with a laminate board composed of a nonconductive material such as glass epoxy or phenolic paper. This board is then clad with a metallic foil, usually copper, and drilled for mounting and through hole connections. After appropriate cleaning and surface preparation, the panel is plated entirely with electroless copper in order to deposit a uniform conductive layer over the entire board, including the inside surfaces of the holes.

At this point, the board can be handled in one of two ways. If it is to be panel plated, the whole board is electroplated with copper. Then a plating resist is applied in a form such that only the desired circuit is left exposed (not covered by resist). This exposed area is then electroplated (by immersing the entire board in the plating solution) with an etch resist, usually solder. If it is to be pattern plated, the plating resist is applied directly after the electroless copper step, so only the circuit is copper electroplated and likewise solder plated.

Following the application of the solder plate by either method the plating resist is stripped off, exposing the copper in areas where the circuit is not required. This copper is then etched off, leaving only the desired circuit which was etch protected by solder plate. The tabs or fingers at the edges of the boards are now stripped of their solder in preparation for subsequent plating. These tabs are electroplated according to the specifications of the customer (in most cases gold or nickel and gold). The solder plate in the circuit pattern is now reflowed to completely seal the copper circuitry and act as a corrosion preventative. The last step is the blanking and cutting of boards to size and final inspection.

The additive process involves the deposition of plating material on the board in the pattern dictated by the circuit, rather than removing metal already deposited (as in the subtractive process). There have been several "additive" methods for producing printed boards. The original method consisted of depositing a thin layer of electroless copper on a bare unclad board and following this up with the conventional subtractive processing.

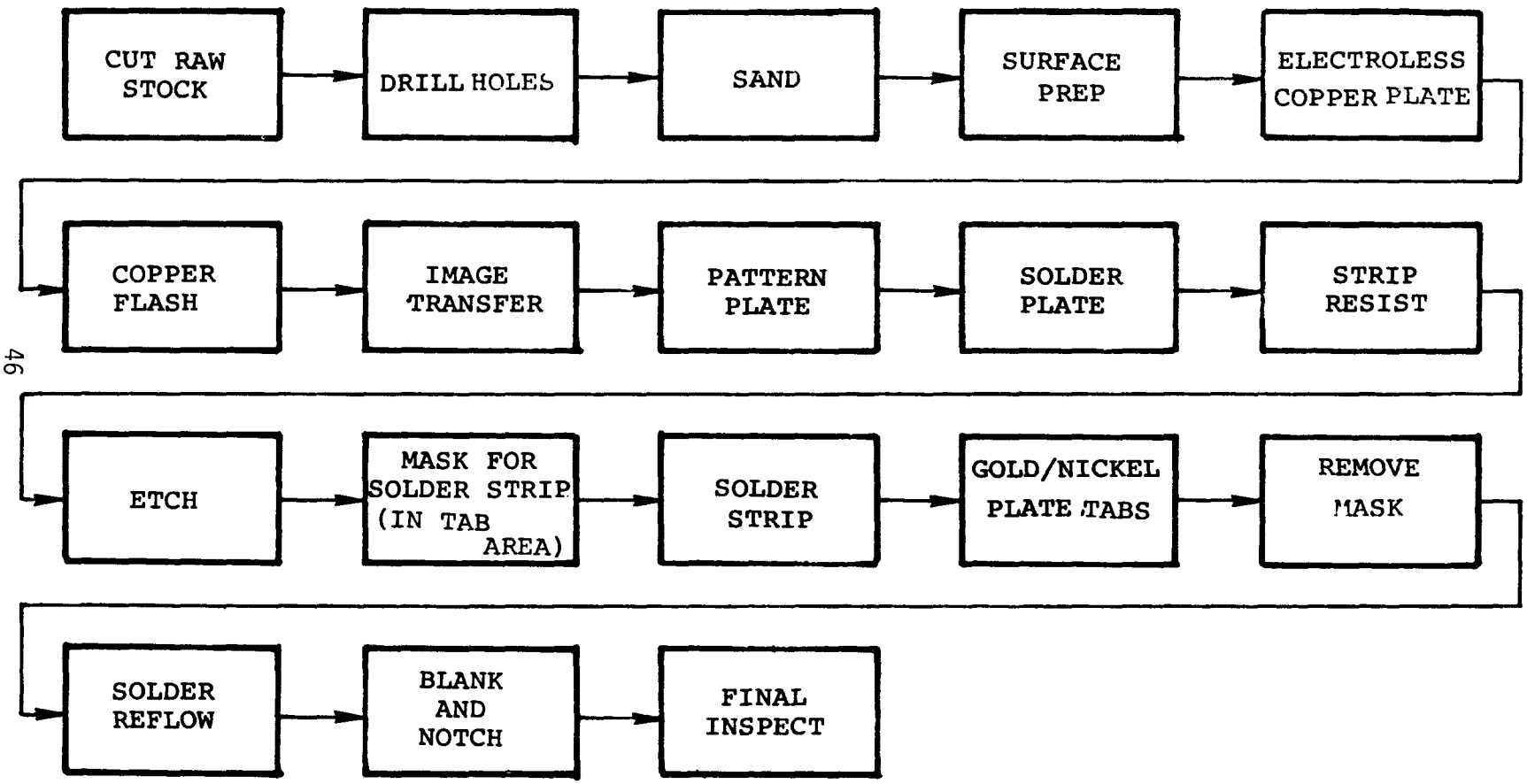

FIGURE 3-6 SUBTRACTIVE PROCESS

The additive process presently employed by some manufacturers is more totally additive than the original method. The process, shown in Figure 3-7, begins with a bare board which may or may not be impregnated with a catalyst. Holes are then formed by drilling or punching. The next step is an adhesion promotion operation where the surface is roughened or etched in order to make it microporous. The roughening or etching is required because of the large area that must be electroless plated. If the board is not catalyst-impregnated, the catalyst is applied after this roughening or etching operation. Following this, the plating resist, describing the required circuit pattern, is applied to the board in the non-circuit areas. The accelerator step necessary for electroless plating is then carried out, and the board goes into the electroless copper bath. Unlike the subtractive process where the electroless copper is only used as a base for copper electroplating, the electroless copper deposition is used in the additive process, to build up the circuit. Since the board does not initially have any copper in non-circuit areas and a resist is applied to these areas prior to electroless plating, a copper etching step is not necessary. Following the copper deposition, the tabs are plated in the same manner as in the subtractive process. At this point, different finishing steps may be applied, such as the application of a protective coating to the board.

A recently developed additive method involves sensitizing the entire board and then selectively activating the catalyst in the pattern of the circuit by means of ultraviolet light.

A semi-additive production process is a compromise between the additive and subtractive methods. The process sequence, shown in Figure 3-8, begins with an unclad board which undergoes hole fabrication (drilling or punching). An adhesion promotion operation is performed on the board just as in the additive process, the board being etched to obtain a microporous surface. At this point, the sequence follows the subtractive process. The entire board is catalyzed and activated, and electroless copper is applied to the entire board including the inside surfaces of the holes. The circuit pattern is then applied by conventional methods (screening or photo-imaging). Copper electroplate is deposited to build up the circuit to the desired thickness. The solder plate for etch masking is then applied, and the plating mask is stripped from the noncircuit areas. The subsequent etching operation is a quick etch (as compared with the subtractive process etch) because only the electroless copper flash has to be removed. In the subtractive process, the copper foil on the board and the electroless copper have to be etched away, but this is not required for the semi-additive process. Thus its advantage over the subtractive process is a reduction in copper waste. After the etch operation, the solder stripping, tab plating, and any final fabrication processes are performed as in the conventional subtractive

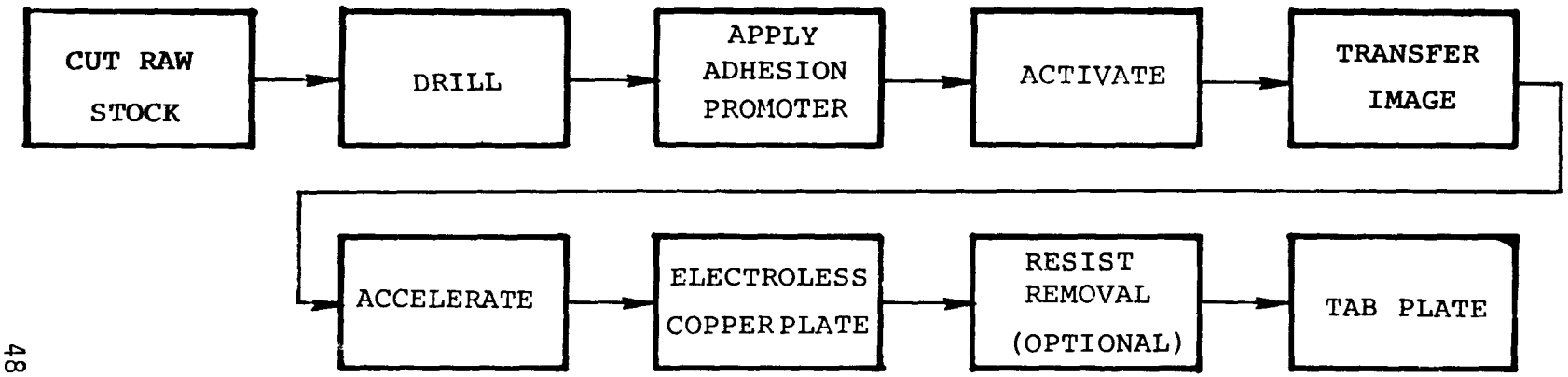

FIGURE 3-7 ADDITIVE PROCESS

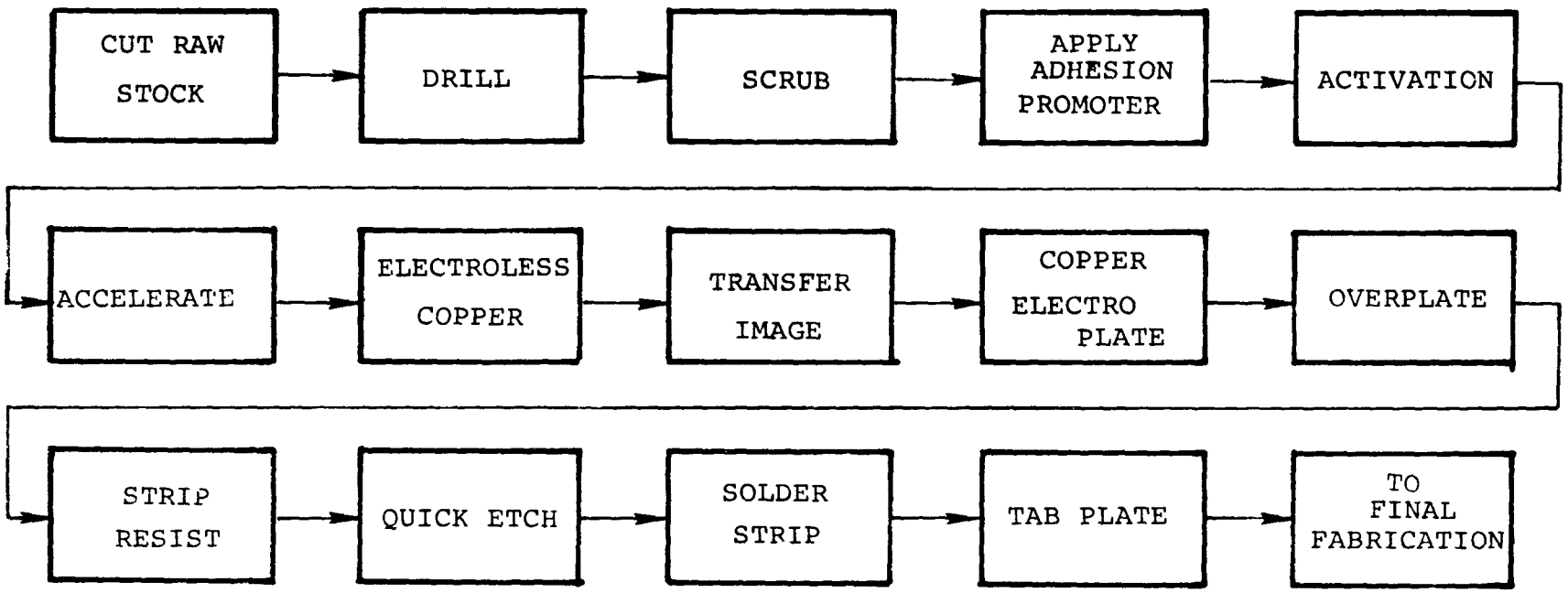

FIGURE 3-8 SEMI-ADDITIVE PROCESS

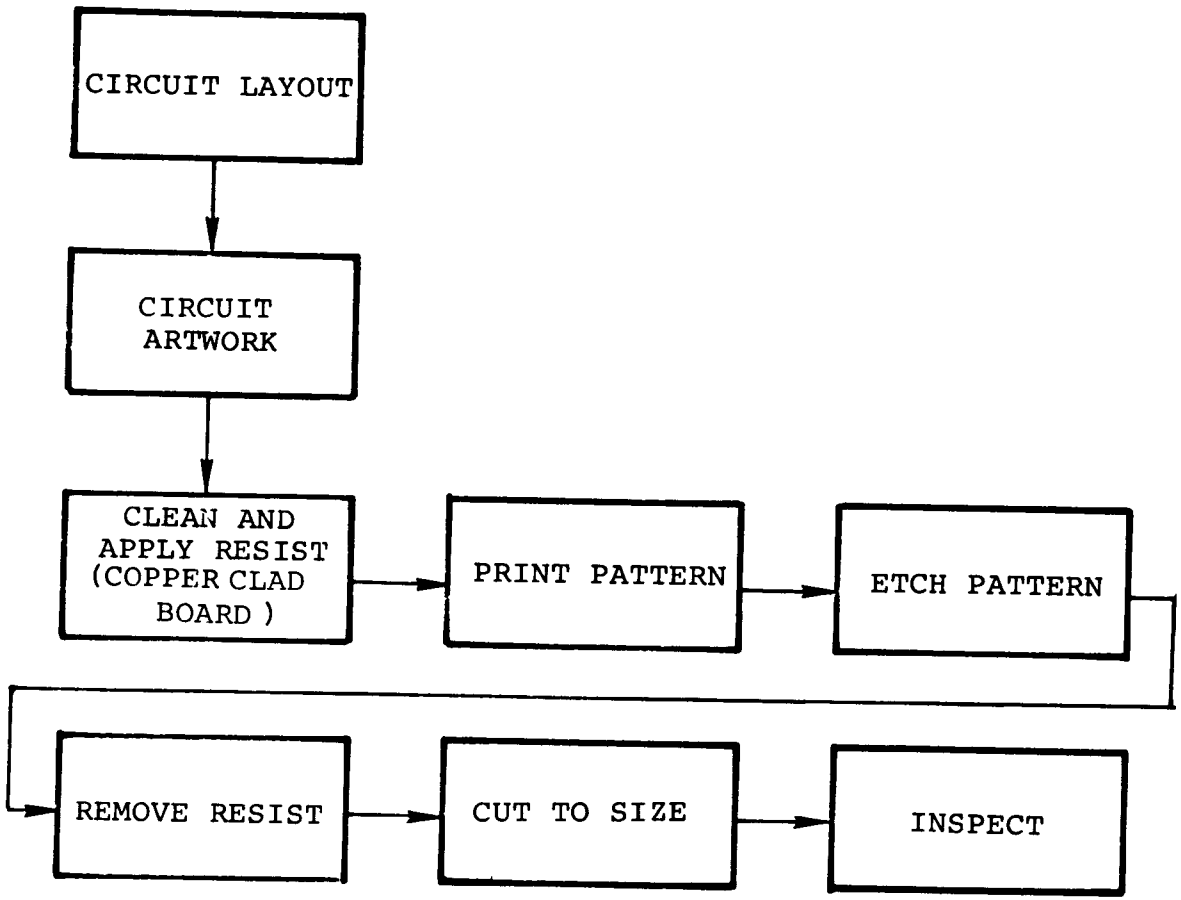

FIGURE 3-9 SINGLE SIDED BOARD PRODUCTION SEQUENCE

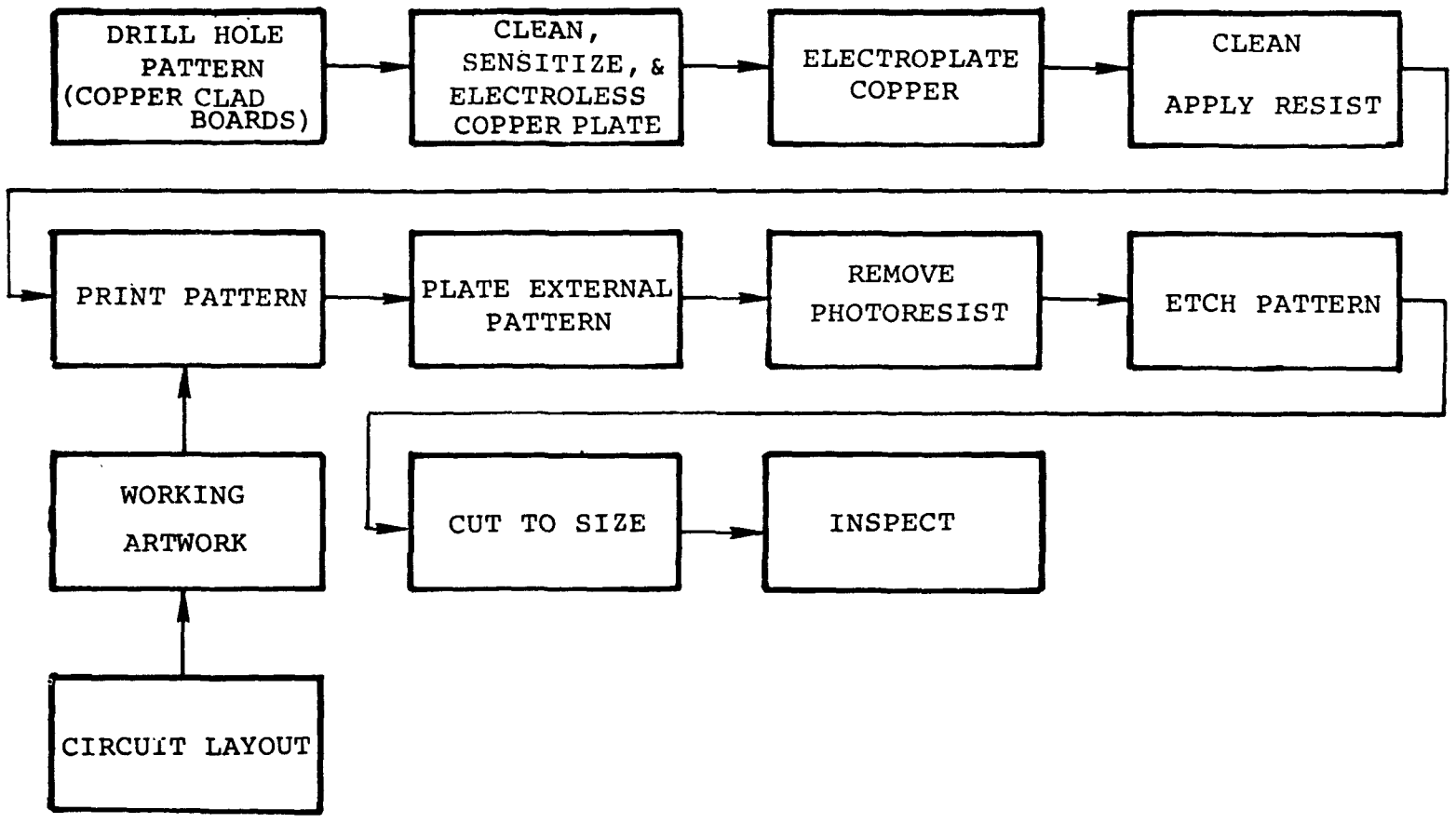

FIGURE 3-10 DOUBLE SIDED BOARD PRODUCTION SEQUENCE

process. This semi-additive process is not used extensively at this time.

Types of Boards - Printed boards can be classified into three basic types: single-sided, double-sided, and multilayer. The type of board used depends on such things as spatial and density demands and intricacy of the circuits.

Single-sided boards (reference Figure 3-9 production sequence) are used for relatively simple circuitry, where circuit types and speeds do not place unusual demands on wiring electrical characteristics. When density demands require more than one layer of wiring, circuits are printed on both sides of the board (see Figure 3-10 production sequence). The interconnection between the layers is accomplished by going through the board rather than around it, and plated through holes have come to be the conventional way of making such a connection. The holes thus serve a dual purpose: providing an electrical connection from one side of the board to the other and accommodating a component lead. These are, of course, more difficult to make than the single-sided boards because of the extra steps involved (the drilling and the through hole plating).

The necessity for increased wiring density as required in many present day electronic packaging applications can be met by the use of more than two layers of wiring, i.e., a multilayer printed board. The production sequence for multilayer printed boards is shown in Figure 3-11. A multilayer board is a series of individual circuit board layers bonded together by an epoxy glass material to produce a thin, monolithic assembly with the internal and external connections to each level of the circuitry determined by the system wiring program.

Production Processes - Printed board production for all the above board types can be broken down into the following operations: 1) cleaning and surface preparation, 2) catalyst application and electroless plating, 3) pattern printing and masking, 4) electroplating, and 5) etching.

1. Cleaning and Surface Preparation - This is a crucial step in printed board production. For a board to be plated correctly without flaws, it must be cleaned and properly treated. In many cases, the boards go through a mechanical scrubbing before they reach the plating lines. In the case of multilayer boards, after they are bonded or laminated, they go through an acid hole cleaning operation, as shown in Figure 3-12, to remove any bonding epoxy which spilled over the holes.

   Once on the plating line, all types of boards are alkaline cleaned (reference Figure 3-13) to remove any soil, fingerprints, smears or other substances which cause plating flaws. A mild etch step

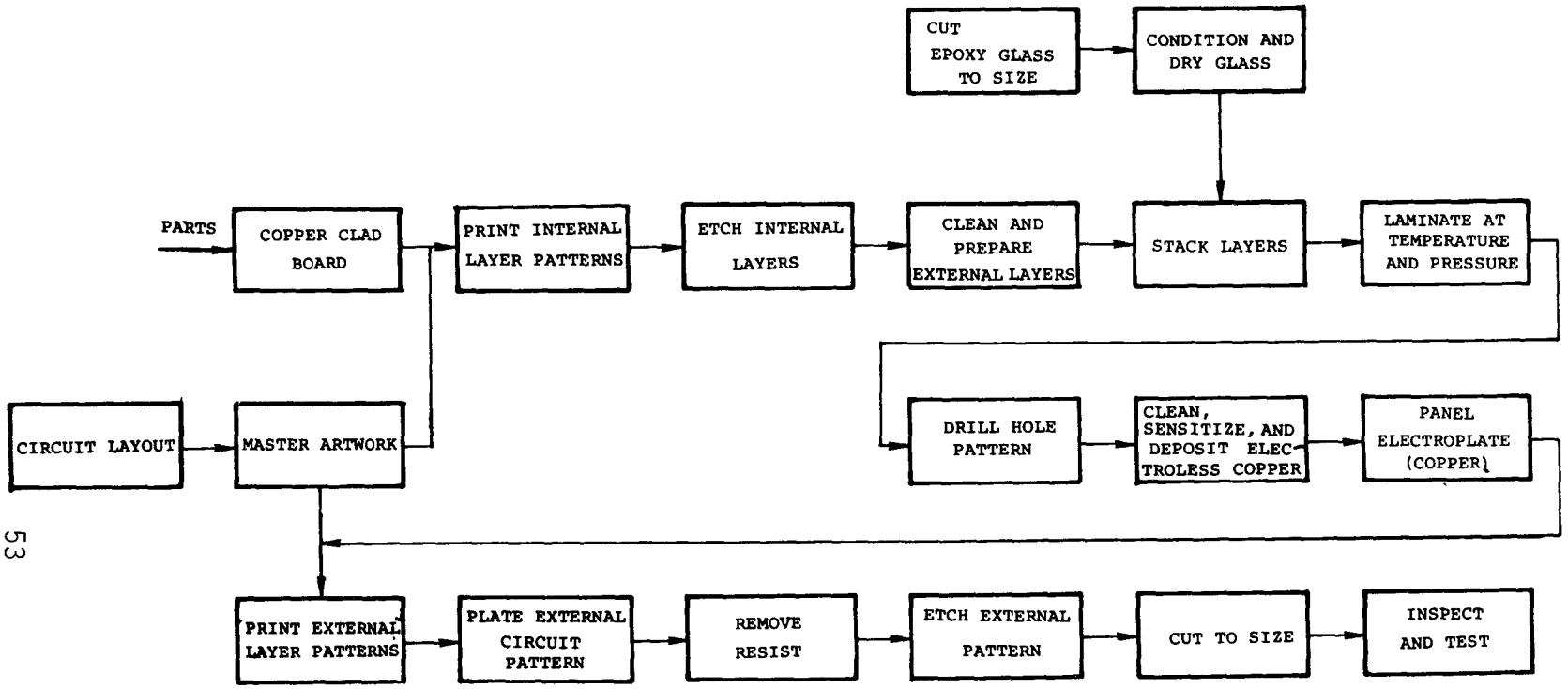

FIGURE 3-11 MULTI-LAYER BOARD PRODUCTION SEQUENCE

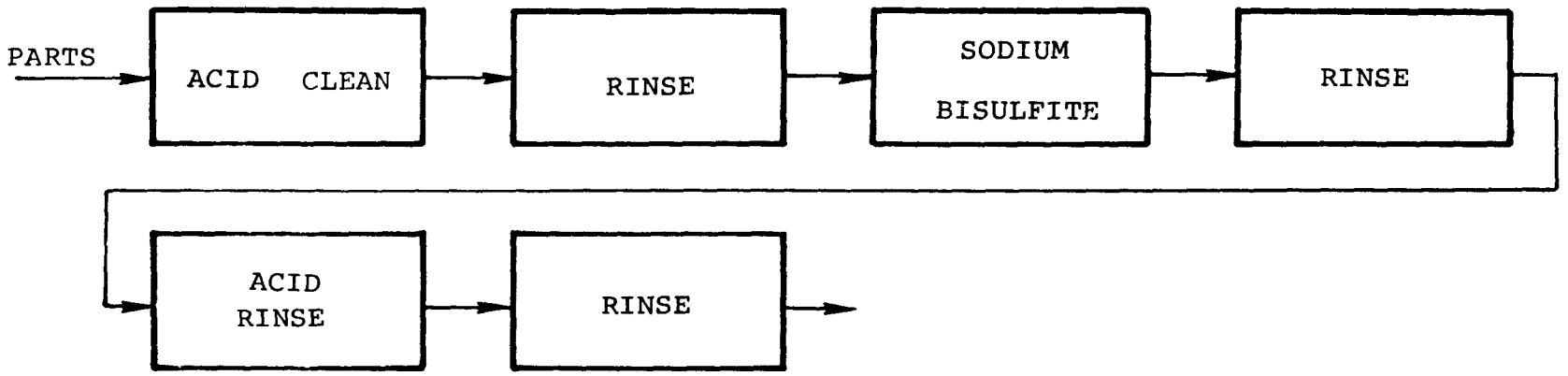

FIGURE 3-12 MULTI-LAYER HOLE CLEANING

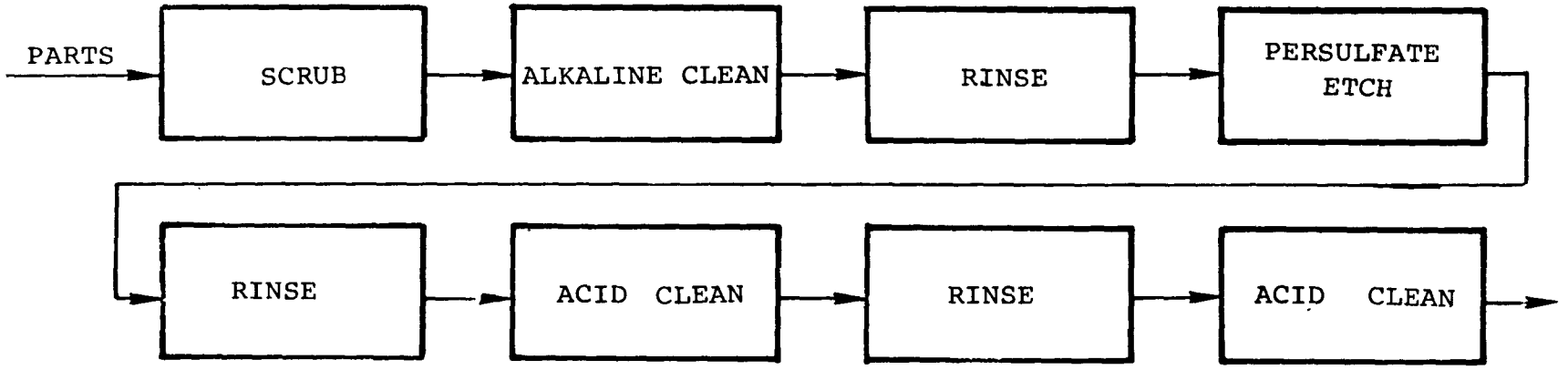

FIGURE 3-13 CLEANING SEQUENCE FOR ELECTROLESS COPPER DEPOSITION

is then performed with ammonium or sodium persulfate to prepare the copper foil surface (for copper clad boards) for subsequent plating. The copper clad boards are then acid treated in order to roughen the exposed plastic surfaces (inside area of holes) to readily accept the catalyst. In the additive and semi-additive production methods, the process sequence begins with an unclad board. In order to get a good bond between the board and the electroless plate, an adhesion promoter is applied and dried. Then the board undergoes an etch (usually chromic acid or chromic-sulfuric). This etch makes the surface of the board microporous which allows for deep penetration of the catalyst and subsequent strong bonding of the electroless copper plate.

2. Catalyst Application and Electroless Copper Plate - Electroless copper deposits quite readily on a copper clad board, but for a deposit to form on the exposed plastic or on a bare board (as in the additive process or in through hole plating), a catalyst must be involved for the copper plate on the nonmetal. The application and activation of the catalyst is a two-step process. The catalyst application consists of the deposition of a thin layer of palladium on the surface of the part. This process goes under several names: "sensitizing", "activating", "accelerating", and "catalyzing".

Three different catalyst application methods have been employed, and all are based on the interaction of stannous and palladium salts. One method involves first adsorbing stannous tin on the surface, then immersing the part in palladium chloride. This reduces the palladium to the metal form and oxidizes the tin from stannous to stannic. A molecular layer of palladium metal is deposited on the surface of the part and the tin remains in the solution. The overall chemistry of this reaction is as follows:

$SnCl_2 + H_2O = SnO + 2HCl$ (Sensitization Reaction)

$SnO + Pd^{+2} + H_2O = SnO_2 + Pd + 2H^+$ (Activation Reaction)

$Cu^{+2} + HCHO + OH^{-1} = Cu + HCOO^{-1} + H_2$ (Electroless Deposition)

Another process used for catalyst application involves the application of a mixture of stannous and palladious compounds on the part. This activator is adsorbed on the part, and a reaction takes place when the part is exposed to a solution that dissolves tin, leaving only palladium on the surface. This step is commonly referred to as "acceleration".

In a recently developed method, specifically for printed boards, a catalyst is applied only to the area to be occupied by the

circuit. Stannous chloride is adsorbed on the entire part's surface. Then the surface is exposed to ultraviolet light shone through a stencil. The light oxidizes the stannous tin to stannic in the area not to be plated. This area, when exposed to palladium chloride, undergoes no reaction, and no palladium is deposited. Only the unexposed area receives a palladium deposit.

Once the catalyst is applied, the metal in the electroless bath plates out on the palladium. After the initial layer of metal is applied, it becomes the catalyst for the remainder of the plating process.

After the boards have been catalyzed, they go into the electroless copper solution (reference Figure 3-14) and are panel plated in the subtractive and semi-additive processes or pattern plated in the additive process. The electroless copper bath contains copper salts (copper sulfate being most prevalent), formaldehyde as a reducer, chelating agents to hold the copper in solution (in most cases either a tartrate or an EDTA compound), sodium hydroxide as a pH buffer, and various polymers and amines which serve as brighteners and bath stabilizers. These chemicals vary according to each bath supplier and his own "proprietary" formulas.

Of particular note among the constituents of electroless plating baths are the chelating agents. Chelation is an equilibrium reaction between a metal ion and a complexing agent characterized by the formulation of more than one bond between the metal and a molecule of the complexing agent and resulting in the formulation of a ring structure incorporating the metal ion and thus holding it in solution. Chelating agents control metal ions by blocking the reactive sites of the metal ion and preventing them from carrying out their normal (and in many cases undesirable) reactions.

In the plating processes, especially electroless plating, the purpose of the chelating agent is to hold the metal in solution, to keep it from plating out indiscriminately. Thus, the chelate can only be replaced by some material capable of forming an even more stable complex, that is, the part to be plated.

One of the drawbacks in the use of chelating agents is the difficulty in precipitating chelated metals out of wastewater during treatment. Quite often, plants which are engaged in plating activities that make use of chelating agents have treatment systems based on the precipitation and settling out of heavy metals. Unfortunately, in this type of treatment system, the chelating agents continue to hold the metal in solution, and cause the chelated metal to pass through the treatment system without precipitating and settling. In some situations,

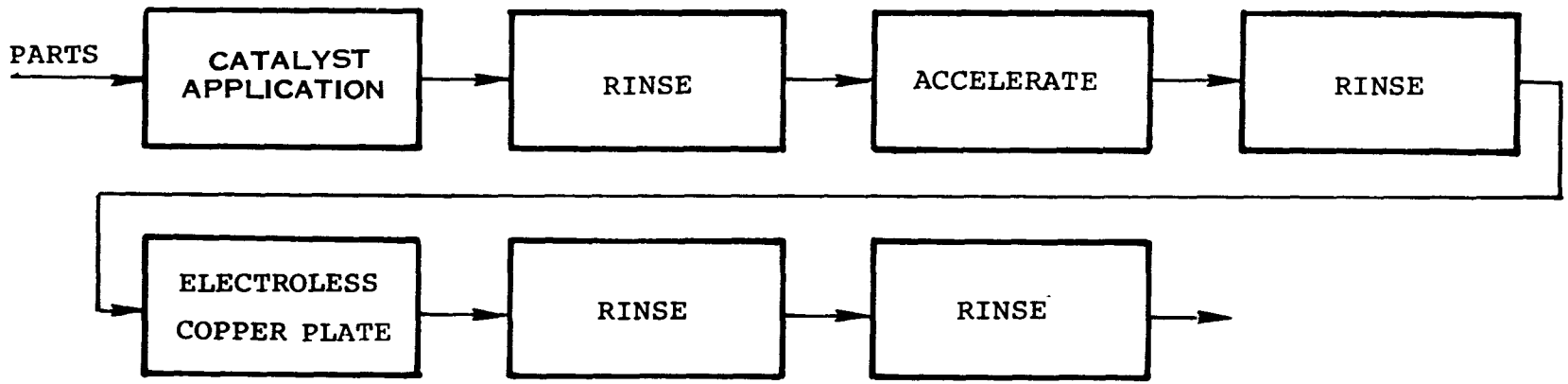

FIGURE 3-14 CATALYST APPLICATION AND ELECTROLESS COPPER DEPOSITION

particularly with the stronger chelates, special consideration or treatment is necessary in order to remove the bound metals. Proper treatment of chelates is discussed in the system portion of Section VII.

The more common chelating agents currently being used in industry were shown in Table 3-3 along with some of their marketers and manufacturers. These chelates are divided into three main categories: amino carboxylic acids, amines and hydroxy acids. The amino carboxylic acids and the amines are stronger, more aggresive chelates that are more difficult to break away from the metal ion. The hydroxy acids are fairly mild chelates whose bond with a metal can be broken rather easily, if necessary. These hydroxy acids are biodegradable.

3. Pattern Printing and Masking - One of the key steps in the manufacture of printed circuit boards is the pattern printing. The precision of this artwork is crucial since the quality of the final board can be no better than the image printed on it. There are three principal methods in which the image or pattern is applied to the board: screening, photosensitive resist techniques and offset printing. All of the methods apply a resist material to the board.

   Screening consists of selectively applying resist material through a stencil or screen. The screen material, which may be silk or metal, is stretched tight over a metal frame. This is placed over the work, and the ink or resist material is squeegeed through the screen. Screening inks come in oil, cellulose, asphalt, vinyl, or resin base. The screening method is highly acceptable for simple low density circuits because its low cost allows for high volume production.

   Photosensitive resist is a light sensitive polymer which, after curing, has a significant chemical resistance. After the board has been cleaned and prepared, the polymer is applied by such methods as dipping or rolling. A light source (usually ultraviolet) is applied through a pattern onto the resist. The light sensitive material hardens, and the unexposed resist is then removed by various methods, usually a trichloroethylene degreaser. This is followed by a baking or curing step after which the resist is able to withstand plating solutions. This type of masking has made possible the production of high density and intricate circuits because of the precision obtainable with this method.

   Offset printing is a high volume production technique which is similar to the operation of a printing press. An etched plate (the printing plate) serves as a master pattern. Ink is transferred from an ink roller to the plate on a rubber cylinder.

The ink image is then deposited on the copper covered board. By making several passes, enough ink can be built up on the board to form a plating or etching resist.

In the subtractive and semi-additive processes for making printed boards, the pattern is applied after the board has been panel plated with copper, and pattern plating directly follows the application of the image. After the board has been solder plated, the plating mask is stripped off, and the solder plate becomes the mask (an etching mask).

In the additive process, the image is applied to the board before it ever enters the electroless plating line. It is then used solely as a plating mask in the electroless bath. After plating, the stripping of the mask is optional, depending on subsequent operations and customer demands.

Whether an additive, semi-additive, or subtractive process is used, masking is applied when the tabs are being plated. The simplest and most commonly used mask for such applications is a water repellent tape which can be easily applied to or removed from the board.

4. Electroplating - Electroplating is performed at several junctures in the production of printed boards. It is employed in the actual buildup of the circuit (in the subtractive and semi-additive processes); it applies the etch resist and anti-corrosion layer to the circuit; and it covers the tabs or fingers of all boards.

   In order to build up the desired circuit in the subtractive and semi-additive processes, copper electroplating is used followed by solder electroplating (reference Figure 3-15). The copper bath itself is usually one of four types: cyanide copper, fluoborate copper, pyrophosphate copper, or sulfate copper. After the application of the copper electroplate, solder electroplate is applied. This serves a dual purpose. First, it acts as a mask during the etching process and second, protects the copper circuit from corrosion after final fabrication. This solder plate usually consists of a 60-40 tin-lead electroplate, although tin-nickel and gold are used in some instances.

   The tabs or "fingers" of the printed circuit boards are electroplated, as shown in Figure 3-16, for most applications (additive, semi-additive or subtractive). In the subtractive and semi-additive processes, there is a solder strip operation before plating to ensure better adhesion, while this step is unnecessary in the additive process. In most cases, nickel and gold or simply gold is used.

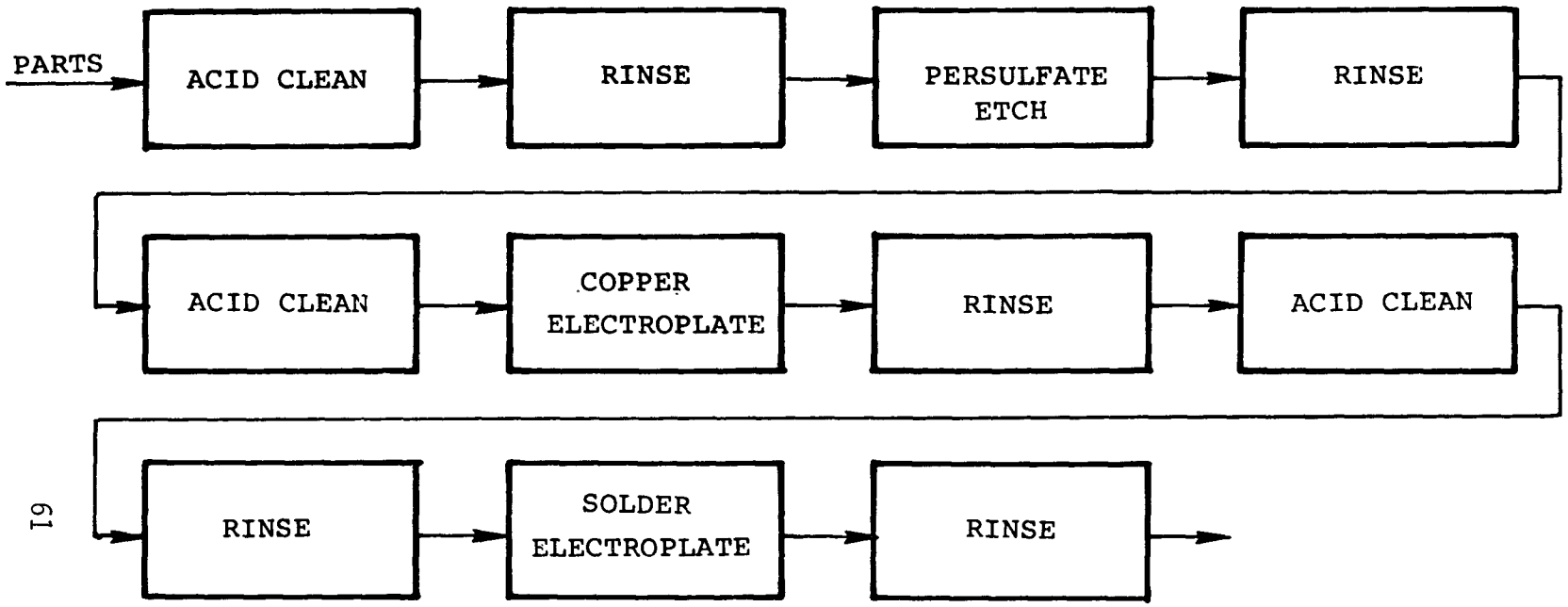

FIGURE 3-15 PATTERN PLATING (COPPER AND SOLDER)

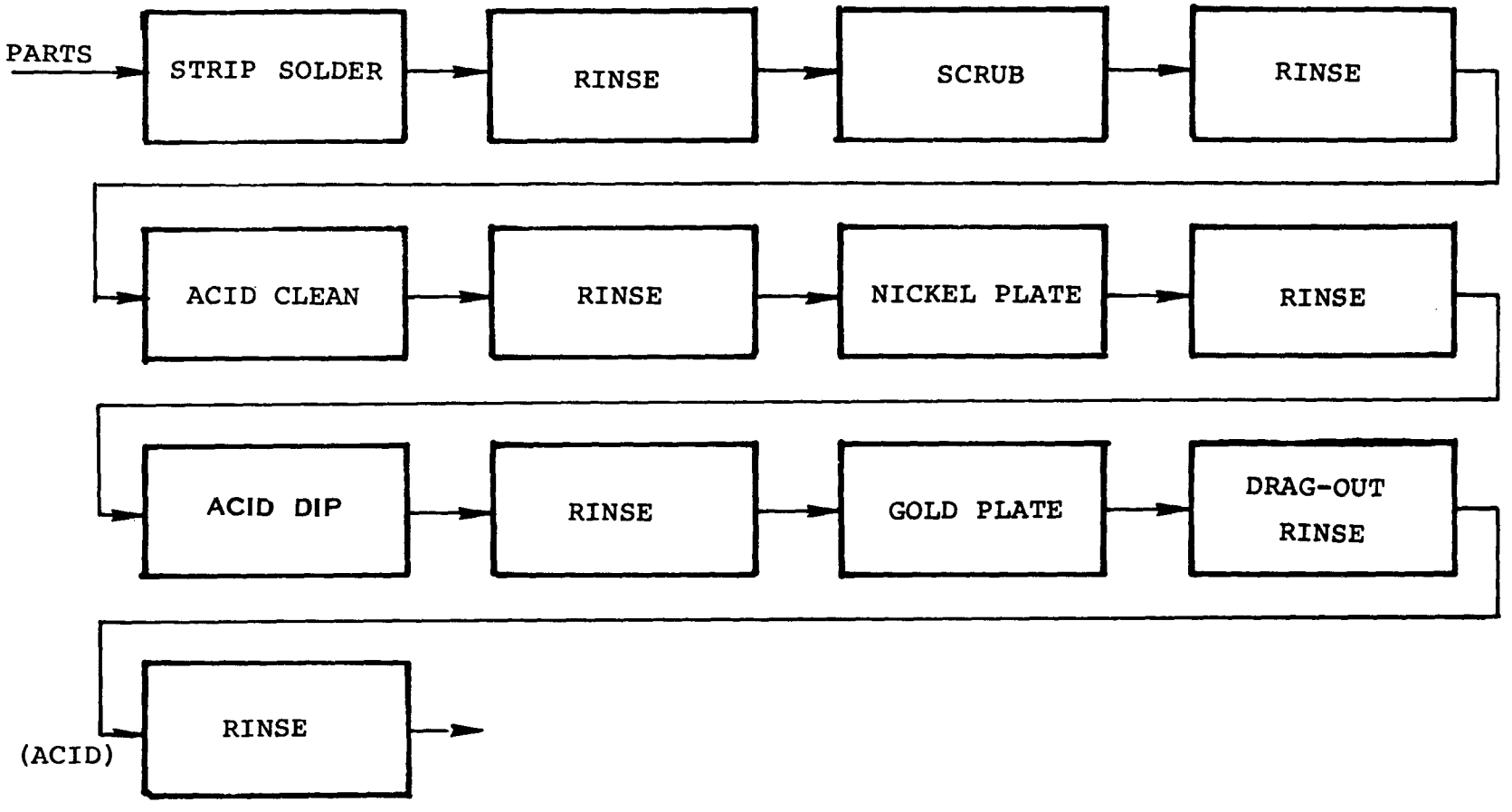

FIGURE 3-16 TAB STRIPPING AND PLATING (NICKEL AND GOLD)

Although it is not a type of electroplating, mention is made here of tin immersion plating. This is a displacement type of plating (reference Figure 3-17) in which a tin solution with a chelating agent is employed. The tin displaces copper which goes into solution. The chelating agent is used to tie up the copper going into solution; the tin only complexes weakly. This is a process almost universally found in printed board shops and is used mainly for rework.

5. Etching - Etching is that process by which all the unwanted copper (i.e., any copper other than in the circuit) is removed from the board. This step, illustrated in Figure 3-18, follows, in sequence, the pattern print and pattern plate. Most companies make use of mechanical etchers which spray solutions from various tanks (containing etch solutions, solder brighteners or activators, and rinse waters) onto horizontally traveling boards.

The etch solutions include:

Ferric chloride base - This provides good uniform etching, but removal of the residual acid from the work is difficult.

Cupric chloride - This is suitable for any resist and has the advantage of continued regeneration through addition of chemicals.

Chromic acid base - This is the most expensive etchant listed here and requires special attention in waste treatment for chromium reduction. It is also very effective.

Ammonium persulfate - This is clean and easy to handle, but the solution can be somewhat unstable.

Etching is always used in the subtractive production method, while an abbreviated etch is employed in the semi-additive process. The etching operation is not a part of the additive process.

After etching, the boards are ready for solder stripping and the electroplating of the tabs, which was described earlier.

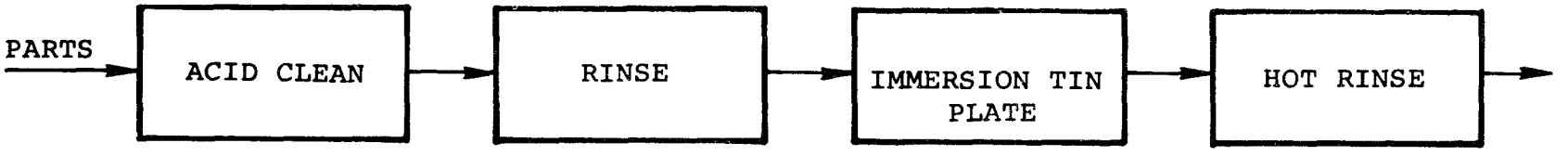

FIGURE 3-17 IMMERSION TIN PLATING LINE

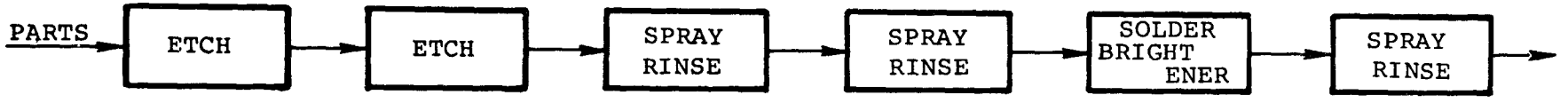

FIGURE 3-18 ETCHING LINE PROCESS

SECTION IV

INDUSTRY CATEGORIZATION

INTRODUCTION

The primary purpose of industry categorization is to establish groupings within the electroplating point source category such that each group has a uniform set of effluent limitations. These subcategories are not mutually exclusive subdivisions of the electroplating point source category, however, as plants often perform operations in more than one subcategory. For the purposes of this document, the printing and publishing industry (SIC 2700) and the iron and steel industry (SIC 3300) are specifically excluded from this subcategorization even though they do perform similar operations. This section presents the subcategories established as well as the rationale for this categorization. There are two main elements of categorization: first, the selection of a basis upon which to divide each industry subcategory; and second, the selection of a discharge limiting parameter for each subcategory against which to quantify the limitations. The subsections which follow deal with each of these major considerations.

CATEGORIZATION BASIS

After considering the nature of the various segments of the electroplating industry and the operations performed therein, the following categorization bases were considered plausible:

1. Type of manufacturing process
2. Type of basis material
3. Process baths used
4. Waste characteristics
5. Size and age of facility
6. Number of employees
7. Geographic location
8. Quantity of work processed
9. Water use
10. Effluent discharge destination
11. Job shops vs. captive shops

Previous regulations for the electroplating point source category subcategorized the industry on the basis of the processes employed. Electroplating was separated from electroplating-related metal finishing processes because electroplating always requires the action of an electrical current to deposit a metallic coating on the basis material. Electroplating-related metal finishing processes may not require a current and may or may not deposit a metallic coat on the

basis material. The processes of anodizing, conversion coating, chemical etching and milling are different enough to warrant separate subcategories. Anodizing, usually performed on aluminum, converts the surface of the object to the metal oxide. Conversion coating refers principally to chromating and phosphating. Each of these processes chemically forms a thin protective coat on the treated object. An electrical current may or may not be applied. Chemical etching and milling involve the dissolution of the basis material.

In restudying the industry for the purpose of establishing pretreatment regulations, the Agency decided that printed circuit board manufacturing and electroless plating also warrant separate subcategorization because of the unique mixture of electrolytic and electroless plating operations found in these processes. Additionally, these processes produce pollutants which may render normal waste treatment techniques ineffective if proper safeguards are ignored.

The following subsections present the rationale for the categorizations and subsequent selection of subcategories.

Type of Manufacturing Process

The types of manufacturing processes are a natural candidate for forming the anodizing, coatings, and chemical etching and milling subcategories for the purpose of establishing effluent limitations. Anodizing is an electrolytic oxidation process which is unique and thus is a separate subcategory. The processes encompassing the coating subcategory involve the displacement, conversion or covering of the base metal, while the operations in the milling subcategory all involve removal of the base or plated metal.

Manufacturing processes also provide a basis for subdividing the printed board industry for the purpose of establishing effluent limitations. The basic processes involved in the manufacture of printed boards are cutting, drilling, screening, electroplating, electroless plating and etching. The above processes involving deposition or removal of metal use water. Although these water using processes are distinctly different from one another, they are all performed on the same product from plant to plant and thus the wastes generated by each plant are similar for a given production level. Because of the similarity in operations from plant to plant, only one subcategory is selected for printed board manufacture. A convenience of this approach is the fact that a printed board plant does not have to classify its manufacturing processes to arrive at an allowable discharge. All the processes performed are in the same subcategory for determining compliance with effluent discharge limitations.

Type of Basis Material

The wastes produced by plating different basis materials with the same plating metal are similar. The distinguishing feature of these wastes is the plating metal rather than the basis material.

Process Baths Used

Process baths (plating baths) provide a basis for subcategorization because the major source of wastes are the dragout of the solutions from the baths and the batch dumping of these baths. Thus the characteristics of the wastes from this industry are dependent on the constituents of the baths. The most significant distinguishing characteristic among electroplating baths is whether common or precious metal plating is performed. Precious metal plating has less waste discharge than common metal plating because of the value of the plating constituents. Plants tend to take greater care in recycling or reclaiming precious metals dragged out from baths and thus the quantity of precious metal contents in streams is significantly less than the common metal contents in common metal plating waste streams. Electroless plating baths are different than electroplating baths in chemical makeup. The metal concentrations are lower and there are more complexing and chelating agents which have a negative effect on removal efficiency during treatment. Accordingly, three subcategories are selected: common metal electroplating, precious metal electroplating, and electroless plating. These subcategories are not subdivided to account for plating of specific metals in each subcategory because the recommended chemical treatment systems in Section VII of this report effectively reduce all metals in each subcategory regardless of the metal plated.

Process baths provide a basis for the subcategorization of anodizing, coatings, and chemical etching and milling because a major source of wastes in these operations is from the dragout of solutions from process baths and thus the characteristics of the wastes from these subcategories are dependent on the constituents of the process baths. However, categorization by manufacturing process inherently encompasses the process baths used because the different process subcategories employ different process baths. While the various processes within each subcategory might employ different process bath constituents, the recommended chemical treatment systems in Section VII of this report effectively reduce all pollutants in each subcategory regardless of the specific operations in each subcategory.

Process baths do not provide a basis for printed board manufacture subcategorization because practicable waste treatment technology identified in Section VII is equally applicable to all of the usual procedures and process solutions described in Section III for printed

board manufacture. In any facility carrying out one or more of the processes shown, the same waste treatment needs arise.

Size and Age of Facility

The nature of the processes for the various subcategories of the electroplating industry is unrelated to size and age of the facility. Size alone is not an adequate categorization parameter since the waste characteristics of a plant per unit of production are essentially the same for plants of all sizes.

The relative age of plants is important in considering the economic impact of a guideline, but it is not an appropriate basis for grouping the industry into specific subcategories because it does not consider the significant parameters which affect the effluent discharged. The constituents of plating baths have a much more significant impact on the effluent discharge than the age of the plant.

Number of Employees

The number of employees engaged in electroplating operations in a plant does not directly provide a basis for subcategorization because these operations can be carried out manually or in automatic machines which greatly conserve labor. For example, an operation for a given production level may require six people if operated manually, whereas a plant of the same production level and carrying out the same operation in an automatic machine may need only two people. The same amount of waste could be generated in each case if all other factors were the same.

Geographic Location

There is not a basis for subcategorization by geographic location alone. Manufacturing processes are not affected by the physical location of the facility, except for availability of useable process water. The price of water may affect the amount of modification to procedures employed in each plant. However, procedural changes can affect the volume of pollutants discharged but not the characteristics of the constituents. The waste treatment procedures described in Section VII can be utilized in any geographical area. In the event of a limitation in the availability of land space for constructing a waste treatment facility, the in-process controls and rinse water conservation techniques described in Section VII can be adopted to minimize the land space required for the end-of-process treatment facility. Often, a compact package unit can easily handle end-of-process waste if good in-process techniques are utilized to conserve raw materials and water.

Quantity of Work Processed

Quantity of work processed is related to plant size. Therefore, the discussion about plant size is equally applicable to the quantity of work processed.

Waste Characteristics

The physical and chemical characteristics of wastes generated by electroplating are inherently accounted for by subcategorization according to process baths and manufacturing processes. The physical and chemical characteristics of wastes generated by printed board manufacturing processes are similar from one plant to another in that all wastes are amenable to the conventional waste treatment technology detailed in Section VII. Since the characteristics of treated waste are the same throughout the industry, waste characteristics do not constitute a basis for subcategorization.

The treatability of wastes from manufacturing operations is uniform throughout each subcategory since all of the principal treatment procedures and in-process controls are technically applicable, by choice, for any given waste from each subcategory. Although the chelates involved in electroless plating and printed board manufacture have a uniquely negative effect on precipitation type waste treatment systems, they can be treated effectively by chemical precipitation if they are segregated from the other types of waste. In addition, electroless plating with chelated baths is common to most printed board manufacturers and thus does not constitute a peculiarity from plant to plant.

Water Use

Water usage alone is not a comprehensive enough factor upon which to subcategorize. While water use is a key element in the limitations established, it does not inherently relate to the source of the waste. Water usage must be related to some other factor to be an effective subcategorization base. The other factor is the manufacturing process utilizing the water since it dictates the water usage.

Effluent Discharge Destination

The effluent discharge destination (surface waters or municipal treatment stream) is not an adequate basis for subcategorization. The wastes produced are determined by the production processes regardless of the effluent wastewater destination.

Job Shops vs. Captive Shops

A job shop/captive shop division is not a valid basis for subcategorization. Although job shops on the average are much smaller than captive shops, the two groups of plants employ similar types of manufacturing processes and generate wastes with similar characteristics.

EFFLUENT LIMITATION BASE

Having selected the appropriate categorization bases and having established the subcategories, the next step is to establish a quantitative parameter on which to base limitations. The possible choices for this quantitative parameter were all considered in great detail before the final selection was made. The primary limitations specified in this document for plants discharging to publicly owned treatment works (POTW) are expressed in terms of concentration. Concentration limits are easier to report since pollutants are normally measured in concentrations, and such a limitation is easier to enforce by the monitoring authority. However, dilution may be a problem in some instances. Where dilution is encountered and is of concern, local authorities should consider the need for prohibitions on dilution, inspection of pretreatment and industrial facilities, and enforcement of mass limitations.

An optional mass-based standard is also presented in this document for those plants which recover process materials and employ water conservation techniques. A milligram per square meter (mg/sq m) standard was selected as the most rational mass-based standard since effluent discharge rates are a function of the level of production, and this standard accounts for differences in the actual production level from plant to plant. The following subsections deal with the selection of this production related parameter and the application of this parameter for discharge limitations.

Selection of Production Normalizing Parameter

The level of production activity in a particular plant can be expressed quantitatively as the number of parts processed, processed area, power consumed or number of employees. All of these parameters have some relation to the level of production in a particular plant, but area processed is more closely associated with the level of activity relative to pollutant discharge than the other potential parameters.

Number of Parts Processed - This parameter is a direct and readily identifiable production related parameter. However, parts to be processed or printed boards produced come in many different sizes and since the pollution generation rate is dependent on the quantity of

solution dragged out of process baths, different size parts drag out different quantities of chemicals from the baths. Thus, the number of parts processed is not sufficient for determining a quantitative prediction of pollution discharge rate, but must be factored by the plated area of these parts.

Area Processed - The direct relation of the pollution generation rate to the quantity of dragout leads naturally to the selection of processed area as a production related pollutant discharge rate parameter. For the common metals electroplating, precious metals electroplating and electroless plating subcategories, processed area is area plated. For the anodizing, coatings and chemical etching and milling subcategories, processed area is area finished. Although masking (particularly hydrophilic masking) might contribute somewhat to dragout, relatively little masking is used in these subcategories. In addition, processed area for electroplating is readily obtainable by measuring power consumption and determining the average plating thickness. Thus, plated area is more easily measured for electroplating operations than plated and masked area (total immersed area).

For the printed board segment, the direct relation of the pollution generation rate on the quantity of dragout leads naturally to consideration of plated area as a production related pollutant discharge rate parameter. The masked area of printed boards is significant, but if the masked area of a printed board immersed in a plating or treatment solution is hydrophobic, it should not drag out any plating or treatment solution, and thus only the non-masked (plated) area contributes to the dragout. However, controlled experiments performed during a study of the industry indicate that masking used on printed boards drags out as much of a plating bath as the area plated. Table 4-1 presents this controlled experiment data showing negligible difference (within expected measurement scatter) in the amount of dragout from masked and unmasked boards. The actual dragouts for each plant in Table 4-1 cannot be compared because different boards were used at each plant. Since the sum of the area plated and the area masked is the total area immersed, and since this entire area immersed contributes to the dragout, total area is the selected production related parameter for pollutant discharge for the printed board manufacturing subcategory.

A unique characteristic of the printed board industry relative to immersed area and associated process bath dragout is the effect of through holes on dragout. To quantify the effect on dragout of through hole plating, controlled experiments were performed. These experiments involved immersing various boards (both with holes and without) in an electroless copper plating bath and then rinsing these boards and measuring the concentration of copper in the rinse tank. The results of these experiments are shown in Table 4-2.

TABLE 4-1

EFFECT OF MASKING ON DRAGOUT

COMPANY ID	TEST	TYPE OF MASK	DRAGOUT UNMASKED	DRAGOUT MASKED	DIFFERENCE
17061	#1	Photoresist	280 mg/l	250 mg/l	-11%
	#2	Photoresist	360.8 mg/l	386.6 mg/l	+ 7%
36062	#3	Screen	0.377 mg/l-in²	0.33. mg/l-in²	- 2%
	#4	Photoresist	0.377 mg/l-in	0.318 mg/l-in	- 6%

TABLE 4-2

EFFECT OF HOLES ON DRAGOUT

COMPANY ID	HOLE SIZE	DRAGOUT WITHOUT HOLES	DRAGOUT WITH HOLES	PERCENT INCREASE DRAGOUT
4065	0.077	1.429 mg/l	1.786 mg/l	25%
6067	0.031-0.040	4.429 mg/l	6.3 mg/l	42%
	0.031-0.040	2.250 mg/l	2.921 mg/l	30%
36062	0.045	0.337 mg/l-in²	0.394 mg/l-in²	17%
	0.037	0.337 mg/l-in²	0.354 mg/l-in²	5%
	0.045	0.938 mg/l-in²	0.072 mg/l-in²	92%
	0.037	0.038 mg/l-in²	0.065 mg/l-in²	74%
	0.045	0.331 mg/l-in²	0.493 mg/l-in²	49%
	0.037	0.318 mg/l-in²	0.477 mg/l-in²	50%

Based on these results, it is apparent that holes cause an increase in dragout, but this increase is extremely variable and dependent on:

Plating bath characteristics (including viscosity, pH, and chemical composition).

Physical handling of the boards (types of racks, drip time, and agitation of parts).

Characteristics of holes (size and density).

Due to the complexity of calculating hole areas and volumes, no significant data in this area were received from most plants contacted. Therefore, the specific effect of holes on dragout cannot be accounted for in establishing limitations. However, the provision for a separate subcategory for printed boards relative to the overall electroplating point source category negates the effect of holes since many plants through hole plate and holes are, therefore, not a distinguishing factor.

Power Consumption - Power consumption was also considered for a production related parameter. For electroplating, this parameter can be related by a coulombic equivalent to the quantity of metal deposited on a part and if the average plating thickness is known, it can be used to determine plated area. For anodizing, this parameter is relatable to oxide buildup on a part and if the average oxide thickness is known, it can be used to determine anodized area. However, pollutant dragout is more closely related to area processed rather than power since power varies as a function of the thickness of the workpiece. Also this parameter is not applicable to electroless plating, coatings, and chemical milling and etching.

Number of Employees - As discussed previously, some plants employ automatic production lines while others have manual lines. Thus, for the same production level, the work force at two plants might be distinctly different. For this reason, the number of employees is not an adequate production related parameter on which to base limitations.

Application of Production Normalizing Parameter

Basing limitations on processed area results in a milligram per square meter limitation that is calculated from the concentration of pollutants (mg/l) in a discharge multiplied by the discharge flow rate (l/hr) and divided by the production rate (sq m/hr). However, the mg/sq m term also requires definition of the number of manufacturing operations since each manufacturing operation involves immersion in a process tank with subsequent dragout of solution into rinse tanks. To account for the different processing sequences found in different electroplating plants, the limitation in terms of area processed must

also be expressed in terms of operations performed (mg/operation-sq m). Since dragout enters an effluent stream only when it is rinsed from a part, only production steps which are immediately followed by a rinse are counted as operations for the limitations.

Table 4-3 lists operatons applicable to the seven subcategories of the electroplating category. Referring to Table 4-3, catalyst application and acceleration are considered operations in electroless plating. This is because these operations involve the deposition of palladium and tin on the surface of a plastic part and are thus similar to plating operations. In addition, the initial acid cleaning and alkaline cleaning steps in a line are counted as operations if they precede all electroplating processes (one alkaline cleaning step per plating line). Sampling and analysis showed that basis metal and surface contaminants are removed to a significant degree in the initial cleaning steps of a plating line. Since the subsequent rinses contribute metal to the waste stream, these initial cleaning steps are regarded as operations. With the exception of catalyst application, acceleration, and the initial cleaning steps, no other surface preparation or post-treatment steps are considered plating operations. These other surface preparation and post-treatment operations are considered integral with subsequent plating type operations, and the water used and wastes produced by these operations are intrinsically included in the water use and pollutant discharge from the plating operation. As such, the water use and pollutant discharge from surface preparation and post-treatment operations are included in the limitations which are established from overall plant discharges.

TABLE 4-3

ELECTROPLATING OPERATIONS

Subpart A-Common Metals Plating

Aluminum Electroplating
Cadmium Electroplating
Copper Electroplating
Chromium Electroplating
Iron Electroplating
Nickel Electroplating
Tin Electroplating
Lead Electroplating
Zinc Electroplating
Electroplating of any combination of above metals

Subpart B-Precious Metals Plating

Gold Electroplating
Indium Electroplating
Palladium Electroplating
Platinum Electroplating
Rhodium Electroplating
Silver Electroplating

Subpart D-Anodizing

Anodizing

Subpart E-Coatings

Coloring*
Chromating*
Phosphating*
Immersion Plating

Subpart F-Chemical Milling and Etching

Chemical Milling
Etching
Bright Dipping
Stripping (To salvage improperly coated parts)**

Subpart G-Electroless Plating

Electroless Plating on Metals

Electroless Plating on Plastics
Catalyst Application
Acceleration

All Subcategories

Stripping (to salvage improperly plated parts)
Coloring**
Chromating**
Phosphating**
Acid Cleaning
Alkaline Cleaning

*Counted as a coating operation if not integral with a plating line. If integral with plating line, it is counted as a plating operation.

**If integral within a plating line, it is counted as an operation of that subcategory.

Table 4-4 lists operations applicable to printed board manufacture. Referring to Table 4-4, both catalyst application and acceleration steps are considered operations in the manufacture of printed boards. This is because these operations involve the deposition of palladium and tin onto the surface of the board and are thus similar to plating operations. In addition, the initial acid cleaning and alkaline cleaning steps in a line are counted as operations if they precede all printed board operations. Sampling and anaylsis showed that basis metal and surface contaminants are removed to a significant degree in the initial cleaning steps of printed board process lines. Since subsequent rinses contribute metal and other contaminants to the waste stream, these initial cleaning steps are regarded as operations. No other surface preparation or post-treatment type steps are considered operations. These other surface preparation and post-treatment operations are considered integral with the surface preceding or subsequent plating type operations, and the water used and waste produced by these operations are intrinsically included in the water use and pollutant discharge from the plating operations.

TABLE 4-4

OPERATIONS IN THE MANUFACTURE OF PRINTED CIRCUIT BOARDS

Catalyst Application
Acceleration
Copper Electroplating
Nickel Electroplating
Solder Electroplating
Tin Electroplating
Gold Electroplating
Silver Electroplating
Platinum Metals Electroplating
Electroplating of Any Combination of Above Metals
Electroless Plating on Plastics
Electroless Plating on Metals
Immersion Plating
Etching
Stripping (To salvage Improperly Plated Parts)
Acid Cleaning*
Alkaline Cleaning*
Conversion Coating

* Only the initial alkaline cleaning and acid cleaning steps in a line are counted as operations. Therefore, any subsequent surface preparation steps are not counted as operations.

Optional TSS Limitations

Another optional set of limitations established for indirect dischargers is the total suspended solids (TSS) monitoring alternative described in Section II. In this set of limitations, TSS replaces copper, nickel, chromium, and zinc as monitoring parameters. TSS was selected as a basis parameter because the Agency believes that if the required level of TSS is met, the individual and total metal concentrations of the effluent streams will not be greater than their regulated concentrations.

SECTION V

WASTE CHARACTERIZATION

INTRODUCTION

This section presents the waste constituents and quantities originating from the Electroplating Point Source Category. The raw waste data presented are derived from an analysis of samples taken downstream of the manufacturing sources but prior to final treatment. All parameters were measured as total material rather than dissolved. A tabulation showing each parameter analyzed, the specific analysis procedure employed, sample collection data, sample preservation data, and the minimum detectable analysis limit is shown in Table 5-1. Table 5-2 describes the analysis technique used to determine the concentration of the chelates found in waste streams sampled. The following section presents the characteristics of the wastes for the common metals plating, precious metals plating, anodizing, chemical conversion coating, etching and chemical milling, electroless plating and printed circuit board subcategories of this point source category because of the distinctly different operations performed in each subcategory. These subcategories are not mutually exclusive subdivisions of the electroplating point source category, however, because plants often perform operations in more than one subcategory.

CHARACTERISTICS OF WASTES FROM THE ELECTROPLATING POINT SOURCE CATEGORY

For the purposes of this document, electroplating process wastewater is defined as all waters used for rinsing, alkaline cleaning, acid pickling, plating and other metal finishing operations; it also includes waters which come about from spills, batch dumps, and scrubber blowdown. Cooling water which does not come in contact with the produce or waste by-products is not included in this definition unless the cooling water is subsequently used in an electroplating process.

Wastewater from common and precious metals plating processes comes from cleaning, surface preparation, plating, and related operations. Wastewater from metal finishing processes comes from cleaning, pickling, anodizing, coating, etching, and related operations. Printed circuit board wastewater comes from cleaning, electroless plating, etching, masking and electroplating. The wastewater from electroless plating derives from etching, catalyst application, acceleration and plating. The constituents in these wastewater include the basis material being finished as well as the components in the processing solutions. Predominant among the wastewater constituents are copper, nickel, chromium, zinc, lead, tin, cadmium, gold, silver, platinum metals, as well as ions that occur from

TABLE 5-1

ANALYSIS METHODS

PARAMETER	ON-SITE	LOCAL LAB	CENTRAL LAB	SAMPLING AND ANALYSIS METHOD
Silver			x	EPA 146*, SM 301*. Atomic absorption. Sample collected in polyethylene or glass bottles and preserved with HNO_3 to pH 2 maximum. Maximum holding period: 6 months. Minimum detectable limit: 0.001 mg/l.
Gold			x	Atomic Absorption. Sample collected in glass bottle and preserved with HNO_3 to pH 2 maximum. Maximum holding time: 6 months. Minimum detectable limit: 0.001 mg/l.
Cadmium			x	EPA 101, SM 301. Atomic absorption. Sample collected in polyethylene or Pyrex bottles and preserved with HNO_3 to pH 2 maximum. Maximum holding period: 6 months. Minimum detectable limit: 0.001 mg/l
Cyanide Amenable to Chlorination		x		EPA 49, SM 376. Colorimetric. Sample collected in polyethylene bottles and preserved with sufficient NaOH to maintain pH of 12 minimum. Sample refrigerated to 4 degrees C. Maximum holding time: 24 hours. Minimum detectable limit: 0.001 mg/l.
Total Cyanide		x		EPA 40, SM 361. Distillation, silver nitrate titration or pyridine - pyrazolone colorimetric. Sample collected and preserved as in cyanide amenable

TABLE 5-1 (Continued)

PARAMETER	ON-SITE	LOCAL LAB	CENTRAL LAB	SAMPLING AND ANALYSIS METHOD
				to chlorination described above. Maximum holding time: 24 hours. Minimum detectable limit: 0.001 mg/l.
Hexavalent Chromium			x	SM 307B. Colorimetric. Diphenylcarbazide. Sample collected in polyethylene or pyrex bottles and preserved with HNO_3 to pH2 maximum. Holding period: 6 months. Minimum detectable limit: 0.005 mg/l.
Fluorides			x	EPA 59, SM 414. Distillation. SPADNS. Sample collected in polyethylene or glass bottle, and refrigerated to 4 degrees C. Maximum holding time: 7 days. Minimum detectable limit: 0.1 mg/l.
Nickel			x	EPA 141, SM 301. Atomic absorption. Sample collected in polyethylene or glass bottles and preserved with HNO_3 to pH 2 maximum. Maximum holding period: 6 months. Minimum detectable limit: 0.001 mg/l.
Phosphorus		x		EPA 249, SM 425. Persulfate digestion vanadomolybdo phosphoric colorimetric. Plastic or glass container. Sample refrigerated to 4 degrees C. Max holding time: 24 hours. Minimum detectable limit: 0.01 mg/l.
Tin			x	EPA 150, SM 301. Atomic absorption. Sample collected in glass bottle and preserved with HNO_3 to pH 2 maximum. Max holding time: 6 months. Minimum detectable limit: 0.001 mg/l.

TABLE 5-1 (Continued)

PARAMETER	ON-SITE	LOCAL LAB	CENTRAL LAB	SAMPLING AND ANALYSIS METHOD
Zinc			x	EPA 155, SM 301. Atomic absorption. Sample collected in polyethylene or glass bottles and preserved with HNO_3 to pH 2 maximum. Maximum holding period: 6 months. Minimum detectable limit: 0.01 mg/l.
Flow	x			Measured with a flowmeter, measurable restriction, elapsed time meter or container and stopwatch, as applicable. Expressed in gallons per hour.
Lead			x	EPA 112, SM 301. Atomic absorption. Sample handling and detection limits same as cadmium.
Palladium			x	Atomic absorption. Sample collected in glass bottle and preserved with HNO_3 to pH 2 maximum. Maximum holding time: 6 months. Minimum detectable limit: 0.001 mg/l.
Phodium			x	Atomic absorption. Sample collected in glass bottles and preserved with HNO_3 to pH 2 maximum. Maximum holding time: 6 months. Minimum detectable limit: 0.001 mg/l.
Total Chromium			x	EPA 105, SM 301. Atomic absorption. Sample handling and detection limits: same as cadmium.
Copper			x	EPA 108, SM 301. Atomic absorption. Sample handling and detection limits: same as cadmium.
Iron			x	EPA 110, SM 301. Atomic absorption. Sample handling and detection limits: same as cadmium.

TABLE 5-1 (Continued)

PARAMETER	ON-SITE	LOCAL LAB	CENTRAL LAB	SAMPLING AND ANALYSIS METHOD
pH	x			EPA 239, SM 424. Measured with a portable pH meter. Expressed in pH units.
Total Dissolved Solids			x	EPA 266, SM 208. Filtration, evaporation. Sample collected in polyethylene and pyrex bottles and refrigerated to 4 degrees C. Maximum holding time: 7 days. Minimum detectable limit: 0.1 mg/l.
Total Suspended Solids			x	EPA 268, SM 208. Filtration. Sample collected in polyethylene or Pyrex bottles and refrigerated to 4 degrees C. Maximum holding time: 7 days. Minimum detectable limit: 0.1 mg/l.
Temperature	x			EPA 286, SM 212. Measured with a thermometer or thermistor. Expressed in centigrade degrees.
Oil and Grease			x	EPA 226, SM 502. Organic solvent extraction. Sample collected in glass and preserved with H_2SO_4 to pH 2 max. Sample refrigerated to 4 degrees C. Maximum holding period: 24 hours. Minimum detectable limit: 0.1 mg/l.

*References

SM (Standard Methods)
"Standard Methods for the Examination of Water and Wastewater", 14th Ed. 1975. American Public Health Association.

EPA
"Methods for Chemical Analysis of Water and Wastes", EPA-625/6-74-003. U. S. Environmental Protection Agency, Washington, D. C., 1974.

TABLE 5-2

CHELATE ANALYSIS METHODS

CHELATING AGENT	CENTRAL LAB ANALYSIS METHOD
EDTA (Ethylenediamine-tetraacetic Acid)	Preliminary screening by solubilizing copper with EDTA at pH 10, followed by filtration and atomic absorption analysis of soluble copper in the filtrate. Analysis of EDTA performed by gas chromatographic analysis, flame ionization detection. Minimum detectable limit: 0.5 mg/l.
Citric Acid	Gas chromatographic analysis, flame ionization detection. Minimum detectable limit: 0.1 mg/l.
NTA	Same as Citric Acid.
Tartrates Tartaric Acid Potassium Sodium Tartrate	Screened by qualitative analysis, spot test using 1% resorcinol and H_2SO_4. Analysis performed by acid-base titration as follows: Sample treated with potassium chloride and acetic acid, then refrigerated to settle out potassium bitartrate KHC_4H_4O. Titrate with sodium hydroxide to Phenolphthalein end point. Minimum detectable limit: 0.1 mg/l.
Thiourea	Colorimetric analysis procedure. Pentaammonium Ferricyanide salts, 1% in water reagent. Minimum detectable limit: 1.0 mg/l.
Gluconic Acid	Gas chromatographic analysis, flame ionization detection. Results inconclusive due to possible interference of other wastewater constituents. Screening for gluconic acid using excess copper and then analyzing the filtrate for copper also was not conclusive for the same reason.
Glycolic Acid	Gas chromatographic analysis, flame ionization detection. Minimum detectable limit: 0.1 mg/l.

cleaning, surface preparation, or processing baths such as phosphates, chlorides, and various metal complexing agents. These constituents are common to both direct and indirect discharge electroplating facilities since they are dependent on the production processes performed.

Water Usage

Water is used for rinsing work pieces, washing away spills, air scrubbing, rinsing after auxiliary operations, preparing solutions, and washing equipment. Descriptions of these uses follow.

Rinsing - A large proportion (approximately 90 percent) of the water usage in plating is for rinsing. The water is used to remove the process solution film from the surface of the work pieces. As a result of this rinsing, the water becomes contaminated with the constituents of the process solutions and is not directly reusable. Dilute rinse water solutions of various process chemicals result from each operation. Figure 5-1 illustrates rinse water flow in a typical electroplating facility. Rinse water use for typical electroless plating lines is diagrammed in Figure 5-2.

Spills and Air Scrubbing - The water from washing away and from scrubbing ventilation exhaust air is normally added to the acid alkali waste stream and then treated. This wastewater generally is contaminated with constituents of the operating solutions.

Process Solution Preparation - As process baths become exhausted or spent, new solutions have to be made up, with water a major constituent of these baths. When a high temperature bath is being used, water has to be added periodically to make up for evaporative losses. Exhausted or spent process solutions to be dumped are often slowly metered into rinse water following the operation and prior to treatment. Alternatively, these solutions, which are much more concentrated than the rinse water, may be processed batchwise in a special treatment facility.

Rinsing after Auxiliary Operations - Water is used for rinsing after auxiliary operations such as rack stripping in order to remove process solution from the surface of the part, just as in rinsing after plating operations.

Washing Equipment - Water used for washing filters, pumps, and tanks picks up residues of concentrated solutions or salts and should be routed to the appropriate rinse water stream for chemical treatment.

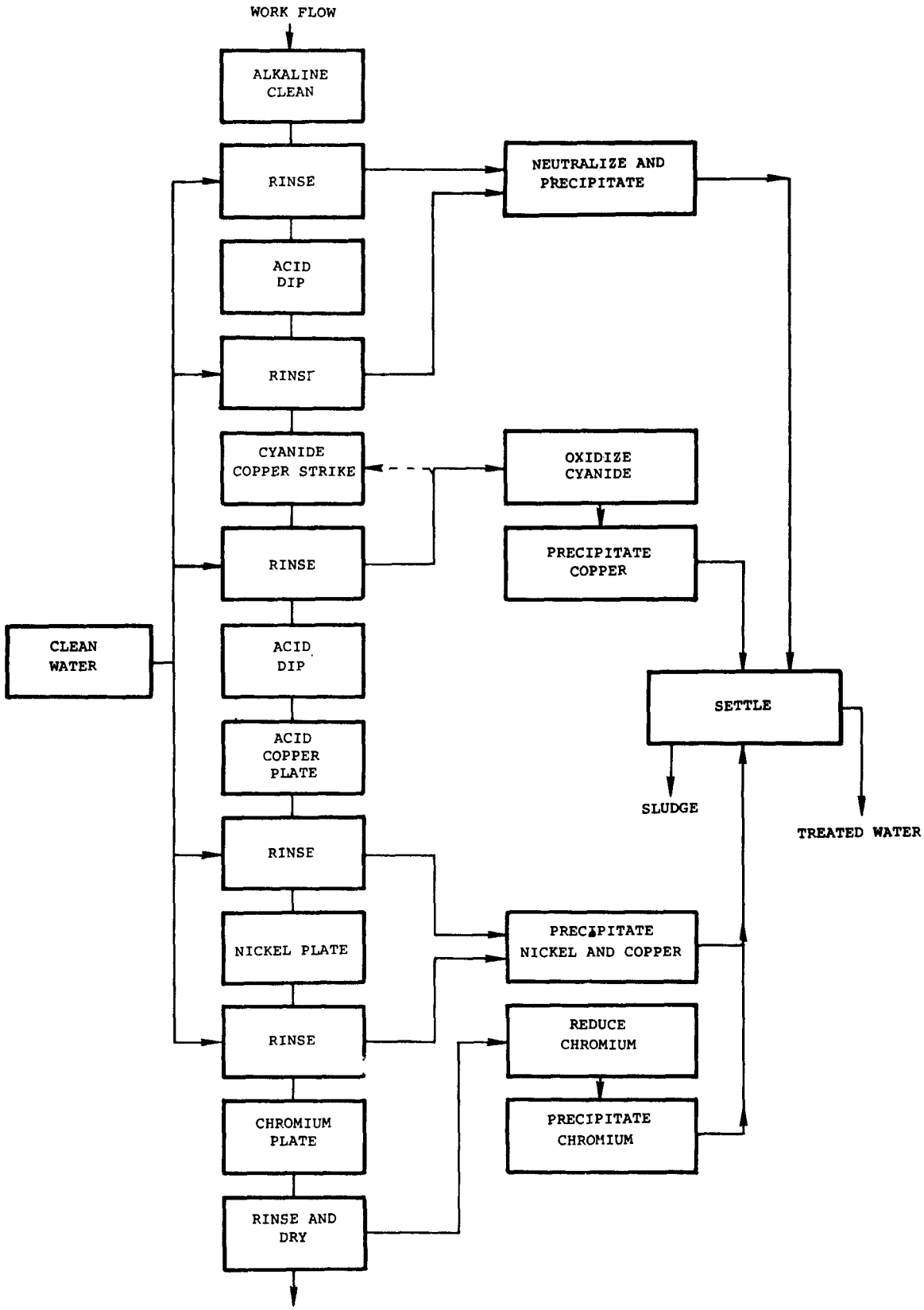

FIGURE 5-1 SCHEMATIC FLOW CHART FOR WATER FLOW IN CHROMIUM PLATING ZINC DIE CASTINGS, DECORATIVE

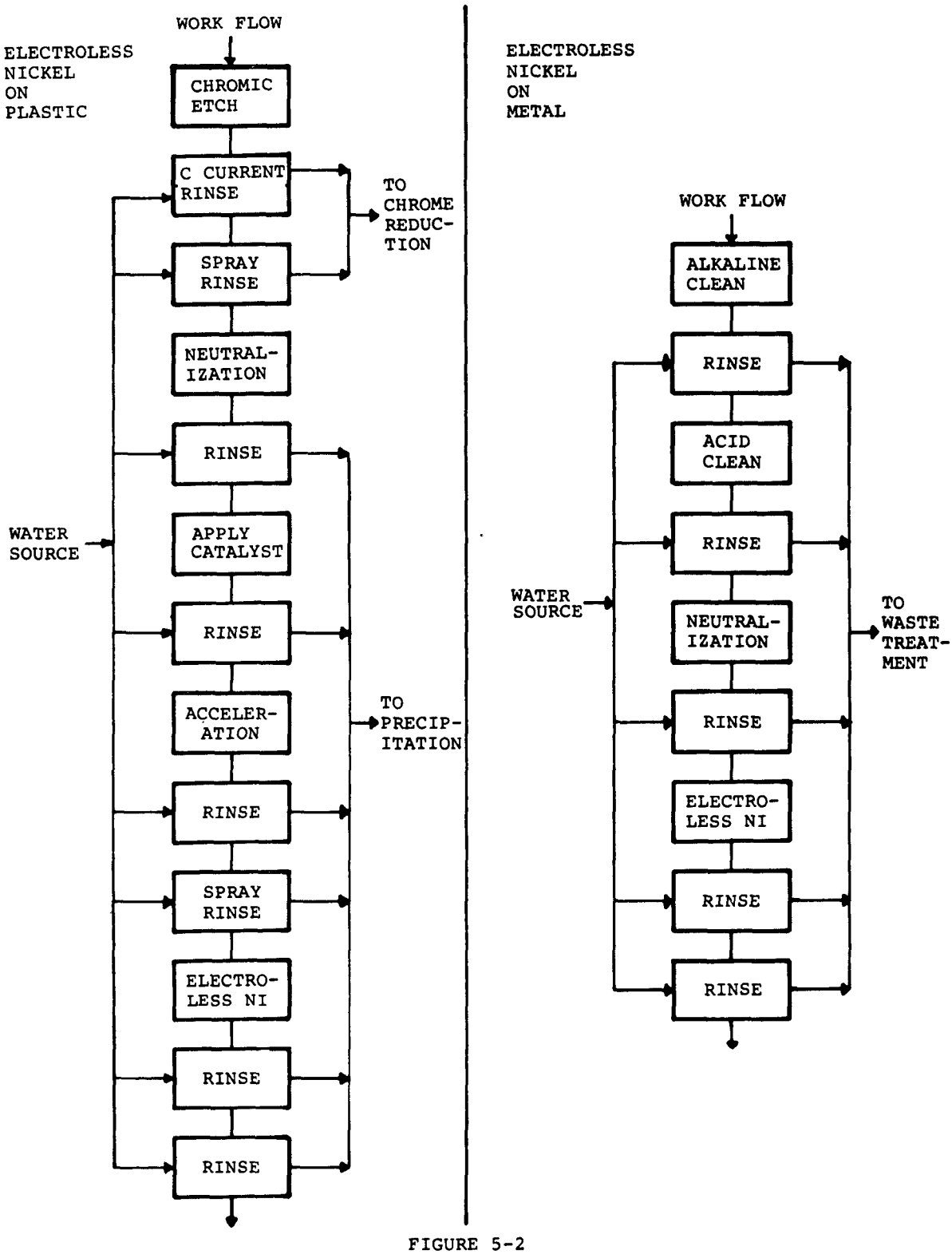

FIGURE 5-2

USE OF RINSE WATER IN ELECTROLESS PLATING OF NICKEL

Sources of Waste

The following process solutions are the major waste sources during normal plating operations.

Alkaline Cleaners - Cleaning solutions usually contain one or more of the following chemicals: sodium hydroxide, sodium carbonate, sodium metasilicate, sodium phosphate (di- or trisodium), sodium silicate, sodium tetra phosphate, and a wetting agent. The specific content of cleaners varies with the type of soil being removed. For example, compositions for cleaning steel are more alkaline and active than those for cleaning brass, zinc die castings, and aluminum. Waste waters from cleaning operations contain not only the chemicals found in the alkaline cleaners but also soaps from the saponification of greases left on the surface by polishing and buffing operations. Some oils and greases are not saponified but are, nevertheless, emulsified. The raw wastes from cleaning process solutions and dissolution of basis metals show up in the rinse waters, spills, dumps of concentrated solutions, wash waters from air-exhaust ducts, and leaking heating or cooling coils and heat exchangers. The concentrations of dissolved basis metal in rinses following alkaline cleaning are usually small relative to acid dip rinses.

Acid Cleaners - Solutions for pickling or acid cleaning usually contain one or more of the following: hydrochloric acid (most common), sulfuric acid, nitric acid, chromic acid, fluoboric acid, and phosphoric acid. The solution compositions vary according to the nature of the basis metals and the type of tarnish or scale to be removed. These acid solutions accumulate appreciable amounts of metal as a result of dissolution of metal from work pieces or uncoated areas of plating racks that are recycled repeatedly through cleaning, acid treating, and electroplating baths. As a result, the baths usually have a relatively short life, and when they are dumped and replaced, large amounts of chemicals must be treated or reclaimed. These chemicals also enter the waste stream by way of dragout from the acid solutions into rinse waters.

The amount of waste contributed by acid cleaners and alkaline cleaners varies appreciably from one facility to another depending on the substrate material, the formulation of the solution used for cleaning or activating the material, the solution temperature, the cycle time, and other factors. The initial condition of the substrate material affects the amount of waste generated during treatment prior to finishing. A dense, scalefree copper alloy part can be easily prepared for finishing by using a mild hydrochloric acid solution that dissolves little or no copper, whereas products with a heavy scale require stronger and hotter solutions and longer treating periods for ensuring the complete removal of any oxide prior to finishing.

Catalyst Application and Acceleration - In electroless plating on plastics, a catalyst must be applied to the plastic to initiate the plating process. The catalyst consists of tin and palladium, and in the acceleration process the tin is removed. A chromic acid surface preparation of the plastic usually precedes the catalyst application.

Plating Operations and Post-treatment - Plating and post-treatment baths contain metal salts, acids, alkalies, and various compounds used for bath control. Common plating metals include copper, nickel, chromium, zinc, cadmium, lead, iron, and tin. Precious plating metals include silver, gold, palladium, platinum, and rhodium. In addition to these metals ammonia, sodium and potassium are common cationic constituents of plating baths. Anions most likely to be present in plating and post-treatment baths are borate, cyanide, carbonate, fluoride, fluoborate, phosphates, chloride, nitrate, sulfate, sulfide, sulfamate, and tartrate.

Many plating solutions contain metallic, metallo-organic, and organic additives to induce grain refining, leveling of the plating surface, and deposit brightening. Arsenic, cobalt, molybdenum, and selenium are used in this way, as are saccharin and various aldehydes. These additives are generally present in a bath at concentrations of less than one percent by volume or weight.

Complexing and chelating agents are important constituents of some plating baths, especially electroless plating solutions. Most electroless plating baths in commercial use are proprietary and identification of complexing agents present is difficult. From a wastewater standpoint, the prime importance of the agents lies in the difficulties they present for effective metal removal since they hinder precipitation of metal ions.

Chromium, aluminum, and manganese are the metal constituents most common in anodizing baths; while ammonia, sulfate, fluoride, phosphate, and various bases are the most important non-metal constituents. Basis metal, usually aluminum, will also be present in the bath. Posttreatment for anodized surfaces often consists only of hot water rinsing. Occasionally, anodized parts are sealed with a chromium salt solution or colored with organic or inorganic dyes.

Chromating baths are nearly all proprietary and little information about their formulation is available. However, all baths have chromate and a suitable activator (an organic or inorganic radical) usually in an acid solution. Chromate conversions can be produced on zinc, cadmium, aluminum, magnesium, copper and brass, and these metals will dissolve into the chromating baths. Posttreatment of chromate conversion coatings may include dipping in organic dips or sealing in a hot water rinse.

The phosphates of zinc, iron, manganese, and calcium are most often used for phosphate coatings. Strontium and cadmium phosphates are used in some baths, and the elements aluminum, chromium, fluorine, boron, and silicon are also common bath constituents. Phosphoric acid is used as the solvent in phosphating solutions. Phosphated parts may be colored in a posttreatment step, or conditioned in very dilute chromic or phosphoric acid.

Solutions for chemical milling, etching, and associated operations contain dissolved or particulate basis metals and either chemical agents for metal oxidation or electrolytes for electrical metal removal (as in electrochemical machining). Bath constituents for chemical removal of basis metals include mineral acids, acid chlorides, alkaline ammonium solutions, nitroorganic compounds, and such compounds as ammonium peroxysulfate. Common electrolytes are sodium and ammonium chloride, sodium and ammonium nitrate, sodium cyanide. Posttreatment baths for chemical milling or etching would not contain significantly different constituents than those listed above.

Immersion plating baths usually are simple formulations of metal salts, alkalies, and complexing agents. The complexing agents are typically cyanide or ammonia and are used to raise the deposition potential of the plating metal. Parts plated by immersion are seldom post-treated except in the case of zinc immersion plating of aluminum. This process is used to form a base for subsequent electroplating, usually copper.

Auxiliary Operations - Auxiliary operations such as rack stripping, although essential to plant operation, are often neglected in considering overall pollutant reduction. Stripping solutions using a cyanide base can form compounds which are difficult to treat. One such compound is nickel cyanide, in which the cyanide is not readily amenable to chlorination. Frequent cleaning of stripping baths and use of alternative chemicals can significantly reduce the pollutants evolving from this type of source.

Waste Constituents And Quantities

The results of analysis of the specific constituents of raw waste streams from the plating establishments in the data base are presented in Tables 5-3 to 5-10. The following subcategories are represented:

Table 5-3	Common Metals Plating
Table 5-4	Precious Metals Plating
Table 5-5	Anodizing
Table 5-6	Coatings
Table 5-7	Chemical Milling and Etching
Table 5-8	Electroless Plating

Table 5-10 Printed Circuit Boards

Data on the chelating agents used in the electroless plating subcategory are presented in Table 5-9.

The values given for cyanide, hexavalent chromium, and total suspended solids do not reflect actual raw waste concentrations. In a majority of plants raw waste was sampled after cyanide oxidation, chrome reduction, and pH adjustment, at a point just prior to clarification. This was done since segregated waste streams were often very difficult to sample, and, in the case of cyanide, potentially hazardous.

The numbers presented in Tables 5-3 through 5-10 are the range of concentration values for each constituent. These values were determined by a statistical analysis of the raw waste streams for 82 visited plants in the data base. This analysis involved allocating total pollutant raw waste masses to appropriate subcategories. No allowance was made for alkaline or acid cleaning. Total raw waste allocations for electroless plating were made to Subparts A and B. Measured concentrations could not be used since nearly all plants visited had wastes applicable to more than one subcategory. It should also be noted that only plants which used a particular metal in their process were used in averaging values for that metal.

Table 5-3 presents the range of pollutants found to a significant degree in the common metals plating subcategory. The main constituents of the waste streams are those parameters which are ingredients of process solutions which have been dragged out into the rinse waters. Included are cyanide and metals such as copper, nickel, chromium, and zinc from plating solutions, fluorides from plating solutions and acid cleaners, and phosphorus from cleaners.

The major constituents of wastewaters produced in the precious metals subcategory are listed in Table 5-4. Just as with common metals plating, the pollutants are a result of process solution dragout: cyanide, silver, gold, palladium, platinum, rhodium and phosphorus.

Table 5-5 presents the pollutants found in the anodizing subcategory. The high chromium levels are a result of chromic acid anodizing. The phosphorous is contributed by cleaners and phosphoric acid and the suspended solids are caused by the removal of soils and basis material.

The concentration levels in Table 5-6 describe the raw wastes found in the coating subcategory. The pollutants in these wastewaters are a product of process solution dragout or basis material removal. Chromium results from chromating and iron, zinc and phosphorous are added by phosphating. Tin is contributed by immersion plating.

Table 5-7 shows the composition of raw waste streams from the chemical milling and etching subcategory. These pollutants originate in the acid process solutions (chromium, fluoride and phosphorus from chromic acid, hydrofluoric acid and phosphoric acid, respectively) or by basis material removal (copper, zinc, iron, tin).

Tables 5-8 and 5-9 present the range of concentrations of pollutants found in the electroless plating subcategory. As a rule, the metals concentrations are lower than those found in common metals plating streams due to more dilute plating solutions. Table 5-9 describes the chelating agents which were present in those plants reporting their use.

The results of an analysis of the constituents of raw waste streams sampled from printed board manufacturers are shown in Table 5-10. These figures are based on two or three day composite sampling visits at ten printed board installations and represent the range of concentrations from the visited printed board plants. Included in the table are the results of an analysis for chelating agents, which are particularly significant wastes from the printed board industry because of their interference with effective waste treatment. The information on chelates includes:

1. The number of plants out of the ten printed board installations sampled for chelating agents which reported use of a specific agent.

2. The number of plants where that chelating agent was detected above a minimum detectable limit.

3. The average concentrations of particular chelating agents found.

The principal constituents of the waste streams from the printed board industry are suspended solids, copper, fluorides, phosphorus, tin, palladium and chelating agents. Low pH values are characteristic of the wastes because of the acid cleaning and surface preparation necessary. The suspended solids are comprised primarily of metals from plating and etching operations and dirt which is removed during the cleaning processes prior to plating. The large amount of copper present in the waste stream comes from the electroless copper plating as well as copper electroplating and etching operations. Fluorides are primarily the result of cleaning and surface treatment processes utilizing hydrofluoric and fluoboric acids. Phosphorus results from the large amount of cleaning that is performed on the boards. Tin results from operations involving catalyst application and solder electroplating, and palladium is a waste constituent from catalyst application. The chelating agents present are primarily from the

electroless plating operations, although others may have been added by the cleaning, immersion plating, and gold plating operations.

In order to figure the ranges of pollutant concentrations used above to characterize the raw wastes of the different subcategories, all 82 sampled plants were used as a data base. However, not all of these raw wastes were used in calculating effluent limitations. Plants were selectively deleted from the data base used for analysis. Several plants were screened out as having treatment systems which were considered to be unrepresentative of the model pretreatment technology. In addition to this, plants which had specific design or operational problems as reported by sampling personnel were screened. A detailed description of effluent limitation derivation is presented in Section XII.

TABLE 5-3

COMPOSITION OF RAW WASTE STREAMS
FROM COMMON METALS PLATING

	(mg/l)
Copper	0.032-272.5
Nickel	0.019-2954
Chromium, Total	0.088-525.9
Chromium, Hexavalent	0.005-334.5
Zinc	0.112-252.0
Cyanide, Total	0.005-150.0
Cyanide, Amenable to Chlorination	0.003-130.0
Fluoride	0.022-141.7
Cadmium	0.007-21.60
Lead	0.663-25.39
Iron	0.410-1482
Tin	0.060-103.4
Phosphorus	0.020-144.0
Total Suspended Solids	0.100-9970

TABLE 5-4

COMPOSITION OF RAW WASTE STREAMS
FROM PRECIOUS METALS PLATING

(mg/l)

Silver	0.050-176.4
Gold	0.013-24.89
Cyanide, Total	0.005-9.970
Cyanide, Amenable to Chlorination	0.003-8.420
Palladium	0.038-2.207
Platinum	0.112-6.457
Rhodium	0.034*
Phosphorus	0.020-144.0
Total Suspended Solids	0.100-9970

*Only 1 plant had a measurable level of this pollutant.

TABLE 5-5

COMPOSITION OF RAW WASTE STREAMS

FROM ANODIZING

(mg/l)

Chromium, Total	0.268 - 79.20
Chromium, Hexavalent	0.005 - 5.000
Cyanide, Total	0.005 - 78.00
Cyanide, Amenable to Chlorination	0.004 - 67.56
Phosphorus	0.176 - 33.00
Total Suspended Solids	36.09 - 924.0

TABLE 5-6

COMPOSITION OF RAW WASTE STREAMS
FROM COATINGS
(mg/l)

Chromium, Total	0.190 - 79.20
Chromium, Hexavalent	0.005 - 5.000
Zinc	0.138 - 200.0
Cyanide, Total	0.005 - 126.0
Cyanide, Amenable to Chlorination	0.004 - 67.56
Iron	0.410 - 168.0
Tin	0.102 - 6.569
Phosphorus	0.060 - 53.30
Total Suspended Solids	19.12 - 5275

TABLE 5-7

COMPOSITION OF RAW WASTE STREAMS
FROM CHEMICAL MILLING AND ETCHING
(mg/l)

Copper	0.206 - 272.5
Chromium, Total	0.088 - 525.9
Chromium, Hexavalent	0.005 - 334.5
Zinc	0.112 - 200.0
Cyanide, Total	0.005 - 126.0
Cyanide, Amenable to Chlorination	0.005 - 101.3
Fluoride	0.022 - 141.7
Iron	0.075 - 263.0
Tin	0.068 - 103.4
Phosphorus	0.060 - 144.0
Total Suspended Solids	0.100 - 4340

TABLE 5-8

COMPOSITION OF RAW WASTE STREAMS
FROM ELECTROLESS PLATING

(mg/l)

Copper	0.002-47.90
Nickel	0.028-46.80
Cyanide, Total	0.005-12.00
Cyanide, Amenable to Chlorination	0.005-1.00
Fluoride	0.110-18.00
Phosphorus	0.030-109.0
Total Suspended Solids	0.100-39.00

TABLE 5-9

CHELATING AGENTS
IN
ELECTROLESS PLATING

Chelating Agents	No. of Plants Reporting Use	No. of Plants Where Found by-Analysis	(range)	(mean)
EDTA	1	0	-	-
NTA	3	3	.1-89.9	9.5
Citric Acid	4	4	.1-1213	7.5
Glutaric Acid	4	3	.1-17.3	10.3
Lactic Acid	1	0		
Tartrates	3	2	.1-7.66	0.1

TABLE 5-10

CHARACTERISTICS OF RAW WASTE STREAMS
IN THE PRINTED BOARD INDUSTRY

Constituent	Range (mg/l)
Total Suspended Solids	0.998 - 408.7
Cyanide, Total	0.002 - 5.333
Cyanide, Amenable to Chlorination	0.005 - 4.645
Copper	1.582 - 535.7
Nickel	0.027 - 8.440
Lead	0.044 - 9.701
Chromium, Hexavalent	0.004 - 3.543
Chromium, Total	0.005 - 38.52
Fluorides	0.648 - 680.0
Phosphorus	0.075 - 33.80
Silver	0.036 - 0.202
Palladium	0.008 - 0.097
Gold	0.007 - 0.190

CHELATING AGENTS

Chelating Agent	No. of Plants Reporting Use of Particular Chelating Agent	No. of Plants Where Agent Was Found by Analysis	Range (mg/l)
EDTA	6	2	15.8 - 35.8
Citrate	5	4	0.9 - 1342
Tartrate	5	4	1.3 - 1108
Thiourea	3	0	-
NTA	2	2	47.6 - 810
Gluconic Acid	1	0	-

SECTION VI

SELECTION OF POLLUTANT PARAMETERS

INTRODUCTION

The Electroplating Point Source Category wastewater constituents that are significant pollutants are listed in Table 6-1. These parameters are listed along with the range of raw waste concentrations in the data base for each subcategory. These paramaters were selected from a broad list of wastewater parameters using the following criteria for selection:

1. The characteristics of the pollutant require control in effluent discharges.

2. The pollutant is commonly present in significant amounts in the processing solutions used in the electroplating industry.

3. The pollutant can be controlled by practical technology that is currently available for wastewater treatment.

Wastewater from this industry comes from pretreatment and post treatment operations as well as the actual metal finishing and electroplating steps. The known significant pollutants and pollutant properties from these operations include pH, total suspended solids, cyanide, chromium, copper, nickel, zinc, cadmium, lead, aluminum, and various precious metals and organic compounds. Many of these pollutants may occur together with their individual concentrations exceeding 100 mg/l.

Many of the pollutants which are generated are toxic pollutants which have potential for environmental or POTW damage. Since none of the metals are destroyed when introduced into a POTW, they either pass through to the POTW effluent or concentrate in the POTW sludge. Cyanide also can pass through a POTW, and both cyanide and the metals can interfere with the POTW treatment processes.

All of the metals and cyanide are known to inhibit the operations of a POTW at sufficiently high concentrations. Threshold process influent concentrations for inhibition of activated sludge processes as given in the Federal Guidelines for State and Local Pretreatment Programs (EPA-430/9-76-017) are as follows:

Pollutant	Conc. (mg/l)	Pollutant	Conc. (mg/l)
Cd	10-100	Ag	5
CN,T	0.1-5	Pb	0.1
Cr,VI	1-10	Ni	1-2.5

TABLE 6-1

POLLUTANT PARAMETER OCCURENCE

Pollutant Parameter	SUBPART Common Metals Plating	Precious Metals Plating	Electroless Plating	Anodizing	Coatings	Chemical Milling & Etching	Printed Circuit Boards
Copper	0.032-272.5		0.002-47.90			0.206-272.5	0.203-535.7
Nickel	0.019-2954		0.028-46.80				0.027-13.30
Chromium, T	0.088-525.9			0.268-79.20	0.190-79.20	0.088-525.9	0.005-47.8
Chromium, VI	0.005-334.5			0.005-5.000	0.005-5.000	0.005-334.5	0.005-4.4
Zinc	0.112-252.0				0.138-200.0	0.112-200.0	
Cyanide, T	0.005-150.0	0.005-9.970	0.005-12.00	0.005-78.00	0.005-126.0	0.005-126.0	0.005-10.80
Cyanide, A	0.003-130.0	0.003-8.420	0.005-1.00	0.004-67.56	0.004-67.56	0.005-101.3	0.005-9.38
Fluoride	0.022-141.7		0.110-18.00			0.022-141.7	0.280-680.0
Cadmium	0.007-21.60						
Lead	0.663-25.39						0.010-10.2
Iron	0.252-1482				0.410-168.0	0.075-263.0	
Tin	0.060-103.4		0.060-90.0		0.102-6.569	0.338-6.569	0.060-54.0
Phosphorus	0.020-144.0	0.020-144.0	0.030-109.0	0.176-33.00	0.060-53.30	0.060-144.0	0.051-53.6
TSS	.1-9970	.1-9970	.1-39.00	36.1-924.0	19.1-5275	.1-4340	1.0-611.0
Silver		0.050-176.4					0.001-0.478
Gold		0.013-24.89					0.006-0.107
Palladium		0.027-0.625					0.005-0.234
Platinum		0.112-6.457					
Rhodium*		0.034					

*Only 1 plant had a measurable level of this pollutant.

Cr,III	50	Zn	0.08-10
Cu	1		

For anaerobic digestion and nitrification processes, the threshold inhibition concentrations differ. In the case of nitrification processes especially, the threshold numbers are usually lower.

Since the metals are not destroyed, that fraction which does not pass through the POTW is incorporated into sludge. Depending on sludge disposal methods, these metals could contaminate and air, the water, or in some cases enter the human food chain. In addition, sewage sludge is a valuable soil conditioner with about 30 percent currently being applied to land (about half of this amount to agricultural cropland, the remainder to golf courses, nurseries, home lawns and gardens, etc.). Land application is, in general, the least expensive and most environmentally beneficial use of sludges. Metal contamination of sludge can have various effects which limit the amount of sludge which can be applied to cropland. These effects are described below. Concentrations in sludge were taken from Appendix VII, page 7, of "Municipal Sludge Management: Environmental Factors" (EPA 430/9-77-004). Food and Drug Administration (FDA) recommendations for cadmium and lead are summarized in Appendix IX of the same reference. Unless noted otherwise, data on soil levels of these metals and discussion of adverse effects on crops are based on information contained in "Considerations Relating to Toxic Substances in the Application of Municipal Sludge to Cropland and Pastureland" (EPA 560/8-76-004) and "Application of Sewage Sludge to Cropland: Appraisal of Potential Hazards of the Heavy Metals to Plants and Animals" (EPA 430/9-76-013).

None of the pollutants are completely removed from wastewater by average POTWs; part of the pollutant load passes through to the POTW effluent and subsequently contaminates the receiving water. Pass through data and some of the effects on receiving water are summarized below. Data on pass through were calculated (as 100 percent minus percent removal) from the removability data given on page 6-45 of "Federal Guidelines: State and Local Pretreatment Programs" (EPA 430/9-76-017b). POTW effluent data were taken from pages 6-39 to 6-41 of the same reference.

EXAMPLES OF EFFECTS OF PRETREATMENT ON SLUDGE QUALITY.

Pretreatment programs have been effective in reducing metals concentrations in sludge. Three examples are cited below.

Buffalo, New York:

Sludge concentration (mg/kg-dry basis)

Pollutant	Before Pretreatment (actual)	After Pretreatment (projected)
Cd	100	50
Cr	2540	1040
Cu	1570	330
Pb	1800	605
Ni	315	115
Zn	2275	364

Grand Rapids Michigan:

Sludge concentration (mg/kg-dry basis)

Pollutant	Before Pretreatment (actual)	After Pretreatment (actual)
Cr	11000	2700
Cu	3000	2500
Ni	3000	1700
Zn	7000	5700

Muncie, Indiana:

Sludge concentration (mg/kg-dry basis)

Pollutant	Before Pretreatment (actual) (1972)	After Pretreatment (actual) (1978)
Cd	23	9.5
Cr	2000	675
Ni	8500	150
Zn	5800	2700
Pb	8500	1000
Cu	1750	700

POLLUTANT PARAMETERS

Copper (Cu)

Copper is an elemental metal that is sometimes found free in nature and is found in many minerals such as cuprite, malachite, asurite, chalcopyrite, and bornite. Copper is obtained from these ores by smelting, leaching, and electrolysis. Significant industrial uses are in the plating, electrical, plumbing, and heating equipment industries. Copper is also commonly used with other minerals as an insecticide and fungicide.

In data from 156 POTWs, the median pass through was over 80 percent for primary plants and about 40-50 percent for trickling filter and activated sludge treatment plants. POTW effluent concentrations (based on data from 192 plants) ranged from 0.003 to 1.8 mg/l (mean = 0.126, standard deviation = 0.242).

The copper which passes through the POTW to the effluent is discharged to ambient surface water. Copper is toxic to aquatic organisms at levels typically observed in POTW effluents, for example:

- 48-hour LC50 for Daphnia Magna in soft water is 0.02 mg/l (J. Fish Res. Board Can., 29: 1972).
- 96-hour LC50 for the chinook salmon is 0.017 mg/l (Chapman, G.A., 1975. Toxicity of Copper, Cadmium, and Zinc to Pacific Northwest Salmonids. US EPA, Corvallis, OR).
- 96-hour TL50 for the fathead minnow is 0.023 mg/l (Water Pollut. Int. J. 10:453, 1966).

A study of 205 sewage sludges showed copper levels of 84 to 10,400 mg/kg, with 1210 mg/kg as the mean value and 850 as the median value. These concentrations are significantly greater than those normally found in soil, which usually range from 18-80 mg/kg. Copper toxicity may develop in plants from application of sewage sludge contaminated with copper. Livestock have been poisoned by eating plants contaminated with copper.

Because of its toxicity, its tendency to pass through a POTW and its wide use in the electroplating industry, copper has been eelected as a pollutant parameter.

Nickel (Ni)

The uses of nickel are many and varied. It is machined and formed for various products as both nickel and as an alloy with other metals. Nickel is also used extensively as a plating metal primarily for a protective coating for steel.

Data from 109 POTWs show that nickel pass through was greater than 90 percent for 82 percent of the primary treatment plants. Median pass through for trickling filter and activated sludge plants was greater than 80 percent. Data from 149 POTWs show POTW effluent concentrations ranging from 0.003 to 40 mg/l (mean = 0.411, standard deviation = 3.279).

The nickel which passes through the POTW is discharged to ambient surface water. Nickel is toxic to aquatic organisms at levels typically observed in POTW effluents, for example:

- 50 percent reproductive impairment of Daphnia magna at 0.095 mg/l (J. Fish Res. Board Can., 29:1691, 1972).

- morphological abnormalities in developing eggs of Limnaea palustris at 0.230 mg/l (Bio. Bulletin 125:508, 1963).

- 50 percent growth inhibition of aquatic bacteria at 0.020 mg/l (Curr. Sci. 45: 578-580, 1976).

Since surface water is often used as a drinking water source, nickel passed through a POTW becomes a possible drinking water contaminant.

A study of 165 sludges showed nickel concentrations ranging from 2 to 3520 mg/kg (dry basis), with a mean of 320 mg/kg and a median of 82 mg/kg. Nickel toxicity may develop in plants from application of sewage sludge on acid soils. Nickel reduces yields for a variety of crops including oats, mustard, turnips, and cabbage.

Nickel is one of the most commonly used metals in the electroplating industry. Due to its wide use and the deleterious effects outlined above, nickel has been selected as a pollutant parameter.

Chromium (Cr)

Chromium is an elemental metal usually found naturally as a chromite ($FeCr_2O_4$). The metal is normally processed by reducing the oxide with aluminum.

Chromium and its compounds are used extensively throughout industry. It is used to harden steel and as an ingredient in other useful alloys. Chromium is also widely used in the electroplating industry as an ornamental and corrosion resistant plating on steel, as a conversion coating on a variety of metals, and can be used in pigments and as a pickling acid (chromic acid).

The two most prevalent forms of chromium found in industry waste waters are hexavalent and trivalent. Chromic acid used in industry is a hexavalent chromium compound which is partially reduced to the trivalent form during use. Chromium can exist as either trivalent or hexavalent compounds in raw waste streams. Hexavalent chromium treatment involves reduction to the trivalent form prior to removal of chromium from the waste stream as a hydroxide precipitate.

The amount of chromium which passes through to the POTW effluent depends on the type of treatment processes used by the POTW. Data from 138 POTWs show that 56 percent of the primary plants allowed more than 80 percent pass through to POTW effluent. More advanced treatment reduces pass through, with median pass through values for trickling filter and activated sludge treatments being about 60

percent. Data from 179 POTWs show POTW effluent concentrations ranging from 0.003 to 3.2 mg/l total chromium (mean = 0.197, standard deviation = 0.48), and from 0.002 to 0.1 mg/l hexavalent chromium (mean = 0.017, standard deviation = 0.020).

The chromium which passes through the POTW is discharged to ambient surface water. Chromium is toxic to aquatic organisms at levels observed in POTW effluents.

- o trivalent chromium significantly impaired the reproduction of Daphnia magna at levels of 0.3 to 0.5 mg/l (J. Fish Res. Board Can., 29: 1691, 1972).
- o hexavalent chromium retards growth of chinook salmon at 0.0002 mg/l (Hanford Bio. Am. Rep., 1957)

Hexavalent chromium is also corrosive, and a potent human skin sensitizer.

Besides providing an environment for aquatic organisms, surface water is often used as a source of drinking water. Because hexavalent chromium can be reduced to trivalent chromium in the environment, and trivalent chromium can possibly be oxidized to hexavalent chromium by chlorine or other agents, the National Interim Primary Drinking Water Standards are based on total chromium, the limit being 0.05 mg/l.

A study of 180 sewage sludges showed that sewage sludge contains 10 to 99,000 mg/kg (dry basis) of chromium (mean = 2620 mg/kg; median = 890 mg/kg). Most crops absorb relatively little chromium even when it is present in high levels in soils, but chromium in sludge has been shown to reduce crop yields in concentrations as low as 200 mg/kg.

Although chromium does not pass through the POTW to the same extent as other metals, its relative abundance in electroplating wastewaters and its toxicity to aquatic organisms justify its selection as a pollutant parameter.

Zinc (Zn)

Occurring in rocks and ores, zinc is readily refined into a stable pure metal and is used extensively as a metal, an alloy, and a plating material. In addition, zinc salts are also used in paint pigments, dyes, and insecticides. Many of these salts (for example, zinc chloride and zinc sulfate) are highly soluble in water; hence, it is expected that zinc might occur in many industrial wastes. On the other hand, some zinc salts (e.g.zinc carbonate, zinc oxide, zinc sulfide) are insoluble in water and, consequently, it is expected that some zinc will precipitate and be removed readily in many natural waters.

Data from 148 POTWs show the median pass through values to be 70-80 percent for primary plants, 50-60 percent for trickling filter plants, and 30-40 percent for activated sludge process plants. POTW effluent concentrations of zinc (based on data from 198 POTWs) ranged from 0.009 to 3.6 mg/l (mean = 0.330, standard deviation = 0.464).

The zinc which passes through the POTW to the effluent is discharged to ambient surface water. Zinc is toxic to aquatic organisms in concentrations typically observed in POTW effluents, for example:

- 96-hour LC50 for the cutthroat trout is 0.090 mg/l (Sport Fishing Abstract 13665, 1971).
- 96-hour LC50 for the chinook salmon is 0.103 mg/l (Chapman, G.A., 1975. Toxicity of Copper, Cadmium and Zinc to Pacific Northwest Salmonids. USEPA, Corvallis, Or).
- 48-hour LC50 for Daphnia magna is 0.100 mg/l (J. Fish Res. Board Can. 29:1691, 1972).

Data from 208 sludges show a zinc range of 101 to 27,800 mg/kg (dry basis), with a mean of 2790 mg/kg and a median of 1740 mg/kg.

These concentrations are significantly greater than those normally found in soil, with observed values of 10 to 300 mg/kg, with 50 mg/kg being the mean. Therefore, application of sewage sludge to soil will generally increase the concentration of zinc in the soil. Zinc can be toxic to plants, depending upon soil pH. Lettuce, tomatoes, turnips, mustard, kale, and beets are especially sensitive to zinc contamination.

Zinc has been selected as a pollutant parameter as a result of its toxicity levels and its ability to pass through the POTW.

Cyanide

Cyanide is a compound that is widely used in industry primarily as sodium cyanide (NaCN), potassium cyanide (KCN) or hydrocyanic acid (HCN). The major use of cyanides is in the electroplating industry where cyanide baths are used to hold ions such as zinc and cadmium in solution and to accelerate the plating process. Cyanides in various compounds are also used in steel plants, chemical plants, photographic processing, textile dying, and ore processing.

Of all the cyanides, hydrogen cyanide (HCN) is probably the most acutely lethal compound. HCN dissociates in water to hydrogen ions and cyanide ions in a pH dependent reaction. The cyanide ion is less acutely lethal than HCN. The relationship of pH to HCN shows that as the pH is lowered to below 7 there is less than 1 percent of the

cyanide molecules in the form of the CN ion and the rest is present as HCN. When the pH is increased to 8, 9, and 10, the percentage of cyanide present as CN ion is 6.7, 42, and 87 percent, respectively. The toxicity of cyanides is also increased by increases in temperature and reductions in oxygen tensions. A temperature rise of 10°C produces a two- to threefold increase in the rate of the lethal action of cyanide.

Cyanide may theoretically be destroyed in a POTW, but data indicate that much of it passes through to the POTW effluent. One primary plant showed 100 percent cyanide pass through, and the mean pass through for 14 biological plants was 71 percent. Data from 41 POTWs indicate the effluent concentrations range from 0.002 to 100 mg/l (mean = 2.518, standard deviation = 15.6). (If the plant with an effluent of 100 mg/l is removed from the data base as an outlier, the mean becomes 0.081 mg/l for 40 POTWs).

The cyanide which passes through to the POTW effluent is discharged into ambient surface water. There is considerable evidence documenting cyanide toxicity to aquatic organisms at levels at or below those typically observed in POTW effluents.

Cyanides are more toxic to fish than to lower aquatic organisms such as midge larve, crustaceans, and mussels. Toxicity to fish is a function of chemical form and concentration, and is influenced by the rate of metabolism (temperature), the level of dissolved oxygen, and pH. In laboratory studies free cyanide concentrations ranging from 0.05 to 0.15 mg/l have been proven fatal to sensitive fish species including trout, bluegills, and fathead minnows (EPA 600/3-76-038). Long term sublethal concentrations of cyanide as low as 0.01 mg/l have been shown to affect the ability of fish to function normally, e.g. reproduce, grow, and move freely (G. Leduc, 1966, Ph.D Thesis, Oregon State Univ., Corvallis).

Cyanide forms complexes with metal ions present in wastewater. All these complexes exist in equilibrium with HCN. Therefore, the concentration of free cyanide present is dependent on the pH of the water and the relative strength of the metal-cyanide complex. The cyanide complexes of zinc, cadmium and copper may dissociate to release free cyanide. Also, where these complexes occur together, synergistic effects have been demonstrated. Zinc, copper, and cadmium cyanide are more toxic than an equal concentration of sodium cyanide.

Another problem associated with cyanide pass through is possible chlorination of cyanide to highly toxic cyanogen chloride, which is subsequently released to the environment. This chlorination reaction may occur as part of the POTW treatment, or subsequently as part of the disinfection treatment for surface drinking water preparation.

Data for Grand Rapids, Michigan, show a significant decline in cyanide concentrations downstream from the POTW after pretreatment regulations were enacted. Concentrations fell from 0.06 mg/l before to 0.01 mg/l after pretreatment was required.

As shown above, cyanide has a tendency to pass through the POTW. It has been selected as a pollutant parameter because of its extensive use and its high toxicity in a number of different forms.

Cadmium (Cd)

Cadmium is used primarily as a metal plating material and can be found as an impurity in the secondary refining of zinc, lead, and copper. Cadmium is also used in the manufacture of primary cells of batteries and as a neutron adsorber in nuclear reactors. Other uses of cadmium are in the production of pigments, phosphors, semi-conductors, electrical contactors, and special purpose low temperature alloys.

Cadmium is an extremely dangerous cumulative toxicant, causing insidious progressive chronic poisoning in mammals, fish and probably other animals because the metal is not excreted. Cadmium could form organic compounds which might lead to mutagenic or teratogenic effects. Cadmium is known to have marked acute and chronic effects on aquatic organisms also.

Data from 110 POTWs show that 75 percent of the primary plants, 57 percent of the trickling filter plants and 66 percent of the activated sludge plants allowed over 90 percent of the influent cadmium to pass through to the POTW effluent. Only 2 of the 110 POTWs allowed less than 20 percent pass through, and none allowed less than 10 percent pass through. Data from 145 POTWs show POTW effluent concentrations ranged from 0.001 to 1.97 mg/l (mean 0.028 mg/l, standard deviation 0.167).

The cadmium which passes through the POTW to the effluent is discharged to ambient surface water. Cadmium is toxic to aquatic organisms at levels typically observed in POTW effluents. For example, the Cadmium Ambient Water Quality Criteria Document (PB-292-423) cites:

- 96 hr LC50 for chinook salmon is reported as 0.0018 mg/l,
- 96 hr LC50 for rainbow trout is reported as 0.0013 mg/l, and
- 48 hr. LC50 for the invertebrate cladoceran is reported as 0.007 mg/l.

Besides providing an environment for aquatic organisms, surface water is often used as a source of drinking water or irrigation water. For states with drinking water or irrigation water standards, the most common cadmium standard is 0.01 mg/l. Chronic ingestion of cadmium

via drinking water and from use of contaminated irrigation water has been documented as the cause of itai-itai disease in humans.

Cadmium has no known biological benefits for humans and is capable of causing kidney damage when present in significant amounts; there is suggestive evidence that cadmium may be a carcinogen. For these reasons, it is prudent to restrict environmental sources of cadmium as much as possible.

A study of 189 sewage sludges showed that sewage sludge contains 3 to 3410 mg/kg (dry basis) of cadmium (mean = 110 mg/kg; median = 16 mg/kg). These concentrations, are significantly greater than those normally found in soil (0.01 to 7 mg/kg, with 0.06 mg/kg being the mean). Data show that cadmium can be incorporated into crops, including vegetables and grains, from contaminated soils. Although the crops themselves show no adverse effects from soils with levels up to 100 mg/kg cadmium, these contaminated crops could have a significant impact on human health.

Three federal agencies have already recognized the potential adverse human health effects posed by the use of sludge on cropland. The FDA recommends that sludges containing cadmium concentrations over 20 mg/kg should not be used on agricultural land. The Department of Agriculture (USDA) also recommends limitations on the total cadmium from sludge that may be applied to land. Under Section 4004 of Resource Conservation and Recovery Act (RCRA), the EPA will shortly promulgate limits on the amount of sludge that can be landspread, based on annual and cumulative cadmium application rates. Under Section 405 of the Clean Water Act, additional restrictions will be placed on sludge for home use, based on cadmium content. All these federal restrictions are designed to prevent excessive cadmium additions to the human diet.

Cadmium has been selected as a pollutant parameter due to its extremely high toxicity to humans and aquatic organisms.

Lead (Pb)

Lead is used in various solid forms both as a pure metal and in several compounds. Lead appears in some natural waters, especially in those areas where mountain limestone and galena are found. Lead can also be introduced into water from lead pipes by the action of the water on the lead.

Lead is a toxic material that is foreign to humans and animals. The most common form of lead poisoning is called plumbism. Lead can be introduced into the body from an atmosphere containing lead or from food and water. Lead cannot be easily excreted and is cumulative in the body over long periods of time, eventually causing lead poisoning

with the ingestion of an excess of 0.6 mg per day over a period of years.

Data from 124 POTWs show median pass through values to be over 80 percent for primary plants. About half of the trickling filter and activated sludge plants allow over 60 percent pass through. Lead concentrations in POTW effluents (based on data from 157 POTWs) ranged from 0.003 to 1.8 mg/l (mean = 0.106, standard deviation = 0.222).

The lead which passes through the POTW to the effluent is discharged to ambient surface water. Lead is toxic to aquatic organisms at levels typically observed in POTW effluents, for example:

- 48-hour LC50 for Daphnia magna is 0.45 mg/l (J. Fish Res. Board Can., 29:1691).
- 48-hour LC50 for rainbow trout is 0.9 mg/l (Water Res. 2:723, 1968).

Besides providing an environment for aquatic organisms, surface water is often used as a source of drinking water. The National Interim Primary Drinking Water Regulation limit lead in drinking water to 0.05 mg/l.

The major risk of lead in drinking water is to small children, where the water is one of several sources which result in a well documented, serious problem of excess lead levels in the body. As a result of the narrow range between the lead exposure of the average American in everyday life and exposure which is considered excessive, (especially in children) it is imperative that lead in water be maintained within strict limits. Potential sources of exposure are diet, water, dust, air, etc. Levels of lead in many urban children indicate overexposure. High body levels of lead can result in serious consequences (chronic brain or kidney damage, or acute brain damage); therefore, lead in water should be limited to the lowest practicable level.

A study of 189 sludges showed lead levels ranging from 13 to 19,700 mg/kg (dry basis) (mean = 1360 mg/kg; median = 500 mg/kg). Since the normal range of lead content in soil is from 2 to 200 mg/kg, application of contaminated sewage sludge to the soil will generally increase the soil's lead content.

Data indicate that the application to cropland of sludge containing excessive lead levels may increase the lead concentration in crops grown on acid soils. Generally, roots accumulate more lead than do plant tops. For above ground crops, significant impacts can occur when sludge is applied as a surface dressing while crops are growing. In light of the potential human health effects, the FDA has

recommended that sludge containing more than 1000 mg/kg of lead should not be used on agricultural land for crops used directly in the food chain.

Lead has been found in electroplating wastes in amounts great enough (as high as 25 mg/l) to warrant concern in light of its very high degree of human toxicity. For this reason, lead has been chosen as a pollutant parameter.

Silver (Ag)

Silver is a soft lustrous white metal that is insoluble in water and alkali. It is readily ionized by electrolysis and has a particular affinity for sulfur and halogen elements. In nature, silver is found in the elemental state and combined in ores such as argentite (Ag_2S), horn silver (AgCl), proustite (Ag_3AsS_3), and pyrargyrite (Ag_3SbS_3).

Silver is used extensively in electroplating, photographic processing, electrical equipment manufacture, soldering and brazing and battery manufacture. Of these, the two major sources of soluble silver wastes are the photographic and electroplating industries with about 30 percent of U. S. industrial consumption of silver going into the photographic industry. Silver is also used in its basic metal state for such items as jewelry and electrical contacts.

Data from a recent EPA study of several POTWs show that silver treatability is quite variable, but that a significant portion of the influent silver (25 percent to 75 percent) is likely to pass through to the POTW effluent.

The Silver Ambient Water Quality Criteria Document (PB-292-441) provides the following information: The toxicity of silver to aquatic organisms has long been recognized. Dosages of 0.000001 to 0.5 mg/l of silver have been reported as sufficient to sterilize water. Various toxic effects on aquatic life have been reported. For example:

- 96-hr LC50 for rainbow trout has been reported as 6.5 ug/l to 28.8 ug/l.
- 96 hr LC50 for the water flea (Daphnia Magna) has been reported as 1.5 ug/l.
- Bioconcentration of silver up to 368 times has been reported.

Silver has been selected as a pollutant parameter because of the acute sensitivity of aquatic systems to its presence.

POLLUTANT PARAMETERS NOT SELECTED

The following pollutants were not selected for regulation:

Fluoride

Fluoride was not chosen for regulation as it would require platers to install additional technology.

Iron

Iron is another pollutant which is removed from wastewater by the POTW. The effects of iron pollution are generally more aesthetically displeasing than they are toxic. Iron is sometimes added to wastewater as a treatment chemical.

Tin

Tin is not generally present in electroplating wastewaters at high concentration levels. In addition, tin has not been found to be harmful to man when present in domestic water supplies. Tin is ingested by humans on an almost daily basis (from canned foods) and appears to have no detrimental health effects.

Phosphorus

Phosphorus (in the form of phosphates) generated by electroplating operations does not comprise a large portion of the total phosphorus received by the POTW. Phosphates are not particularly harmful to humans although they do create nuisance conditions in aquatic systems.

Gold, Palladium, Platinum, Rhodium

These metals are not found in electroplating effluents at high concentrations. Most platers make extensive efforts to recover them prior to discharge because of economic considerations.

SECTION VII

CONTROL AND TREATMENT TECHNOLOGY

INTRODUCTION

This section describes the treatment techniques currently used or available to remove or recover wastewater pollutants normally generated by plating, metal finishing and printed board manufacturing processes. Following a discussion of in-plant technologies and then invidividual treatment technologies for the overall electroplating industry, this section presents system level descriptions of conventional end-of-pipe treatment and advanced treatment. Advanced treatment systems have greater pollutant reduction than conventional treatment and/or stress conservation of raw materials by recycle and reuse. The individual treatment technologies presented are applicable to the entire electroplating industry for both direct and indirect dischargers and reflect the entire electroplating data base. End-of-Pipe and advanced systems are presented first for plating and metal finishing (combined) and then for printed board manufacture.

To minimize the total mass of pollutants discharged in electroplating, a reduction in either concentration or flow or both is required. Several techniques are being employed to effect a significant reduction in total pollution. These techniques can be readily adapted to other existing facilities and include:

1. Avoidance of unnecessary dilution. Diluting waste streams with unpolluted water makes treatment more expensive (since most equipment costs are directly related to volume of waste-water flow) and more difficult (since concentrations may be too low to treat effectively). Precipitated material may also be redissolved by unpolluted water.

2. Reduction of flow to contaminating processes. Use of countercurrent, spray, and fog rinses greatly reduces the volume of water requiring treatment. After proper treatment, the amount of a pollutant (based on maximum removal efficiencies and the solubility of the pollutant) that remains in the solution is a function of the volume of water. Hence, less water, less pollutant discharged.

3. Treatment under proper conditions. The use of the proper pH can greatly enhance pollutant precipitation. Since metallic ions precipitate best at various pH levels, waste segregation and proper treatment at the optimum pH will produce improved results. The prior removal of compounds which increase the solubility of waste materials will allow significanly more

efficient treatment of the remaining material. An example is the segregation of chelated wastes from wastewater containing non-chelated metals. This will improve water discharge quality since chelates form a highly soluble complex with most metals.

4. Timely and proper disposal of wastes. Removal of sludges from the treatment system as soon as possible in the treatment process minimizes returning pollutants to the waste stream through re-solubilization. One plant visited during this program (ID#23061) utilized a settling tank in their treatment system that required periodic cleaning. Such cleaning had not been done for some time, and our analysis of both their raw and treated wastes showed little difference. Subsequent pumping out of this settling tank resulted in an improved effluent (reference Table 7-1).

   Once removed from the primary effluent stream, waste sludges must be disposed of properly. If landfills are used for sludge disposal, the landfill must be designed to prevent material from leaching back into the water supply. Mixing of waste sludges which might form soluble compounds should be prevented. If sludge is disposed of by incinerating, the burning must be carefully controlled to prevent air pollution. A licensed scavenger may be substituted for plant personnel to oversee disposal of the removed sludge.

TABLE 7-1

COMPARISON OF WASTEWATER AT PLANT ID 23061
BEFORE AND AFTER PUMPING OF SETTLING TANK

Parameter	Concentration (mg/l) Before Sludge Removal		Concentration (mg/l) After Sludge Removal	
	Total Raw Waste	Treated Effluent	Total Raw Waste	Treated Effluent
Cyanide	0.007	0.001	0.005	0.005
Cyanide, Total	0.025	0.035	0.005	0.005
Phosphorus	2.413	2.675	14.32	13.89
Silver	0.001	0.001	0.002	0.003
Gold	0.007	0.010	0.005	0.005
Cadmium	0.001	0.006	0.005	0.002
Chromium,	0.005	0.105	0.005	0.005
Chromium	0.023	0.394	0.010	0.006
Copper	0.028	0.500	0.127	0.034
Iron	0.885	3.667	2.883	1.718
Fluoride	0.16	0.62	0.94	0.520
Nickel	0.971	1.445	0.378	0.312
Lead	0.023	0.034	0.007	0.014
Tin	0.025	0.040	0.121	0.134
Zinc	0.057	0.185	0.040	0.034
TSS	17.0	36.00	67.00	4.00
Solids	17.0	36.00	67.00	4.00

TABLE 7-2

USAGE OF VARIOUS RINSE TECHNIQUES BY COMPANIES

Type of Rinse Techniques	Number of Companies Using Indicated Rinse Techniques
Single running	157
Countercurrent	98
Series	69
Spray	89
Dead, Still, Reclaim	115

IN-PLANT TECHNOLOGY

The intent of in-plant technology for the overall electroplating point source category is to reduce or eliminate the waste load requiring end-of-pipe treatment and thereby improve the efficiency of waste treatment. In-plant technology involves the selection of rinse techniques (with the emphasis on closed loop rinsing), plating bath conservation, good housekeeping practices, recovery and/or reuse of plating and etch solutions, process modification and integrated waste treatment. The sections which follow detail each of these in-plant technologies describing the applicability and overall effect of each in the electroplating industry.

Rinse Techniques

Reductions in the amount of water used in electroplating can be realized through installation and use of efficient rinse techniques. Cost savings associated with this water use reduction manifest themselves in reduced operating costs in terms of lower cost for rinse water and reduced chemical costs for wastewater treatment. An added benefit is that the waste treatment efficiency is also improved. It is estimated that rinse steps consume over 90 percent of the water used by a typical plating facility. Consequently, the greatest water use reductions can be anticipated to come from modifications of rinse techniques.

Rinsing is essentially a dilution step which reduces the concentration of contaminants on the work piece. The design of rinse systems for minimum water use depends on the maximum level of contamination allowed to remain on the work piece (without reducing acceptable product quality or causing poisoning of a bath) as well as on the efficiency or effectiveness of each rinse stream.

The following values have been reported as the maximum acceptable concentration in terms of total dissolved solids to prevent work quality problems (staining, spotting, or peeling) for some plating and cleaning operations. The concentrations shown are for the final rinse on a finished product of medium quality. Higher concentrations can be allowed following intermediate plating operations.

Operation	Maximum Total Dissolved Solids (mg/l)
Rinse after nickel or copper	37
Rinse after cyanide	37
Rinse after chromium	15
Rinse after acid dip or alkaline cleaner	750
Rinse after acid dip prior to chromium plate	15
Rinse after passivating	350-750

Rinsing is particularly critical in electroless plating because of the high degree of cleanliness required for electroless plating operations as compared to electroplating. It is necessary to carefully and completely rinse parts to remove contaminants (particularly following activation and sensitization steps in electroless plating of plastic) before entering the plating bath. These contaminants may cause the plating bath to seed out or to react excessively.

The sections which follow deal with rinsing efficiency, the primary rinsing methods, various rinse systems, and the application and control of rinse systems. Table 7-2 summarizes the usage of the various rinse techniques by the 196 companies in this data base.

Rinsing Efficiency - A rinse system should be considered efficient if the dissolved solids concentration is reduced just to the point where no noticeable effects occur either as a quality problem or as excessive dragin to the next process step. Operation of a rinse tank or tanks which achieved a 10,000 to 1 reduction in concentration where only a 1,000 to 1 reduction is required represents inefficient use of water. Operating rinse tanks at or near their maximum acceptable level of contamination provides the most efficient and economical form of rinsing. Inefficient operation manifests itself in higher operating costs not only from the purchase cost of water, but also from the treatment of it.

Primary Modes of Rinsing - There are five primary modes of rinsing presented below along with the advantages and applicability of each of those modes.

1. Single Running Rinse - This arrangement (reference Figure 7-1) requires a large volume of water to effect a large degree of contaminant removal. Although in widespread use, single running rinse tanks should be modified or replaced by a more effective rinsing arrangement to reduce water use.

2. Countercurrent Rinse - The countercurrent rinse (reference Figures 7-2 and 7-3) provides for the most efficient water usage and thus, where possible, the countercurrent rinse should be used. There is only one fresh water feed for the entire set of tanks, and it is introduced in the last tank of the arrangement. The overflow from each tank becomes the feed for the tank preceding it. Thus, the concentration of dissolved salts decreases rapidly from the first to the last tank.

3. Series Rinse - The major advantage of the series rinse (reference Figure 7-4) over the countercurrent system is that the tanks of the series can be individually heated or level

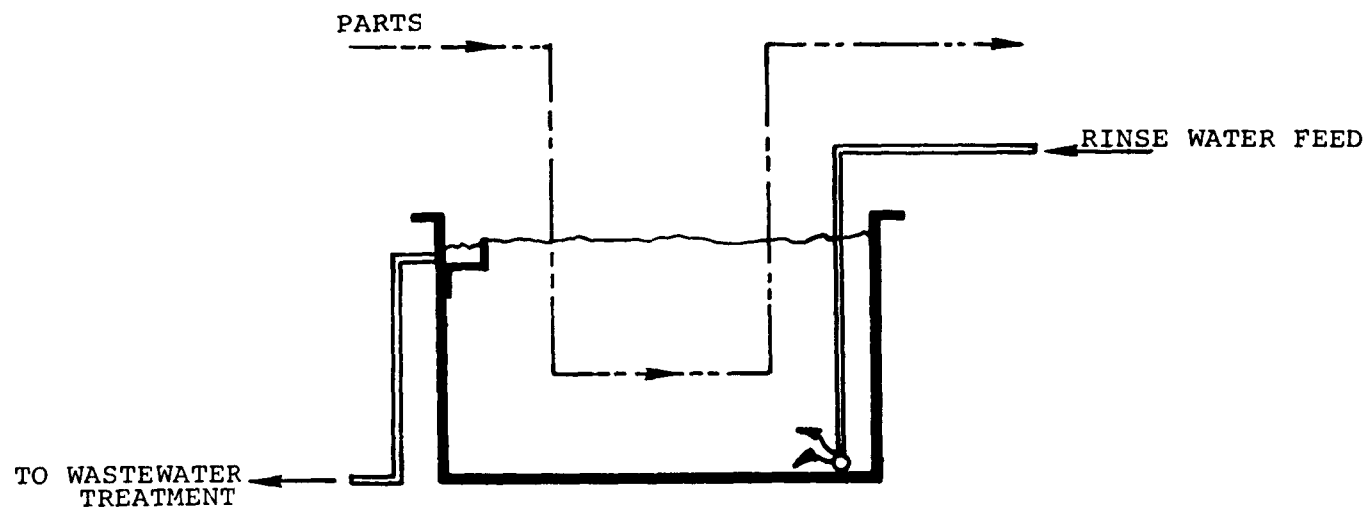

FIGURE 7-1. SINGLE RINSE TANK

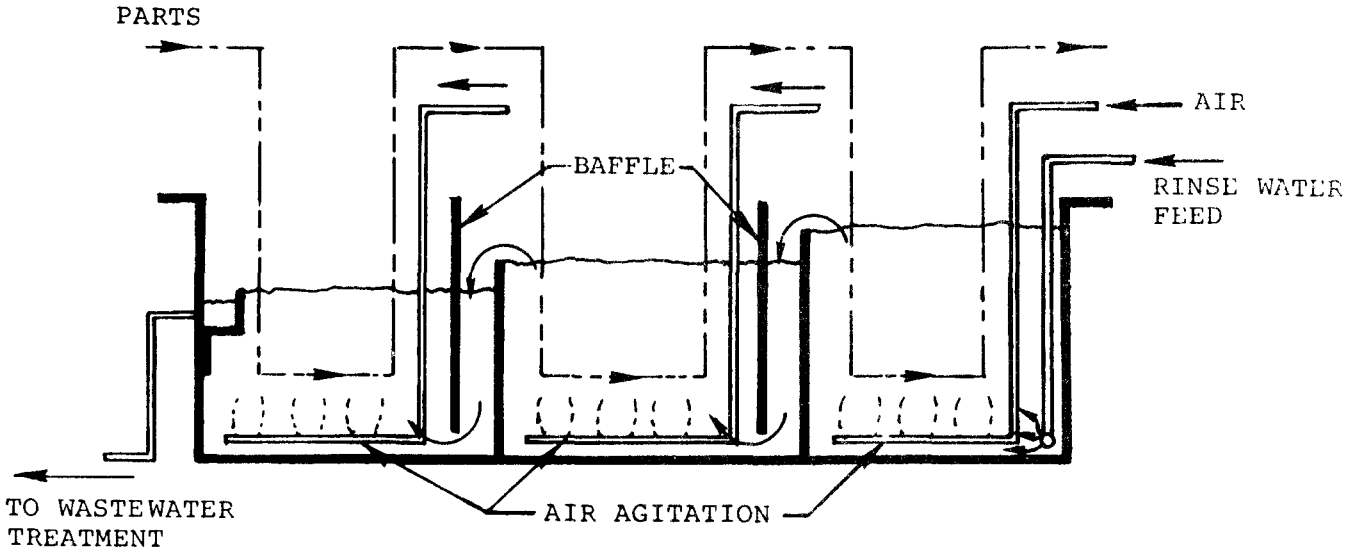

FIGURE 7—2 3 STAGE COUNTER CURRENT RINSE

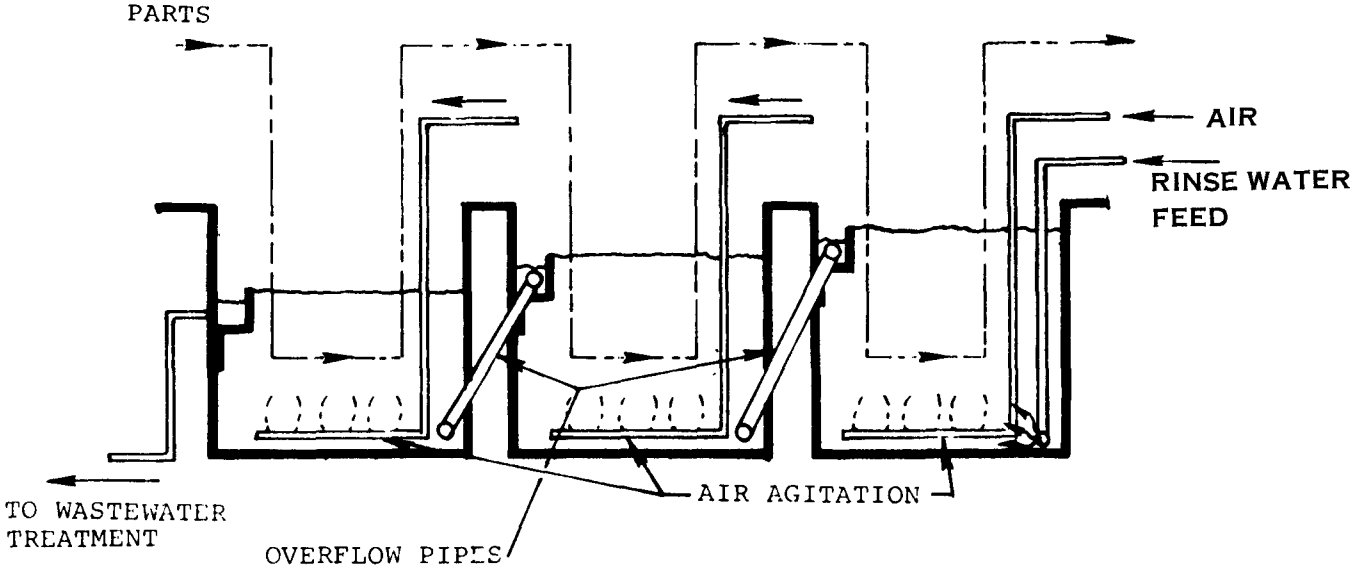

FIGURE 7–3 3 STAGE COUNTERCURRENT RINSE WITH OUTBOARD ARRANGEMENT

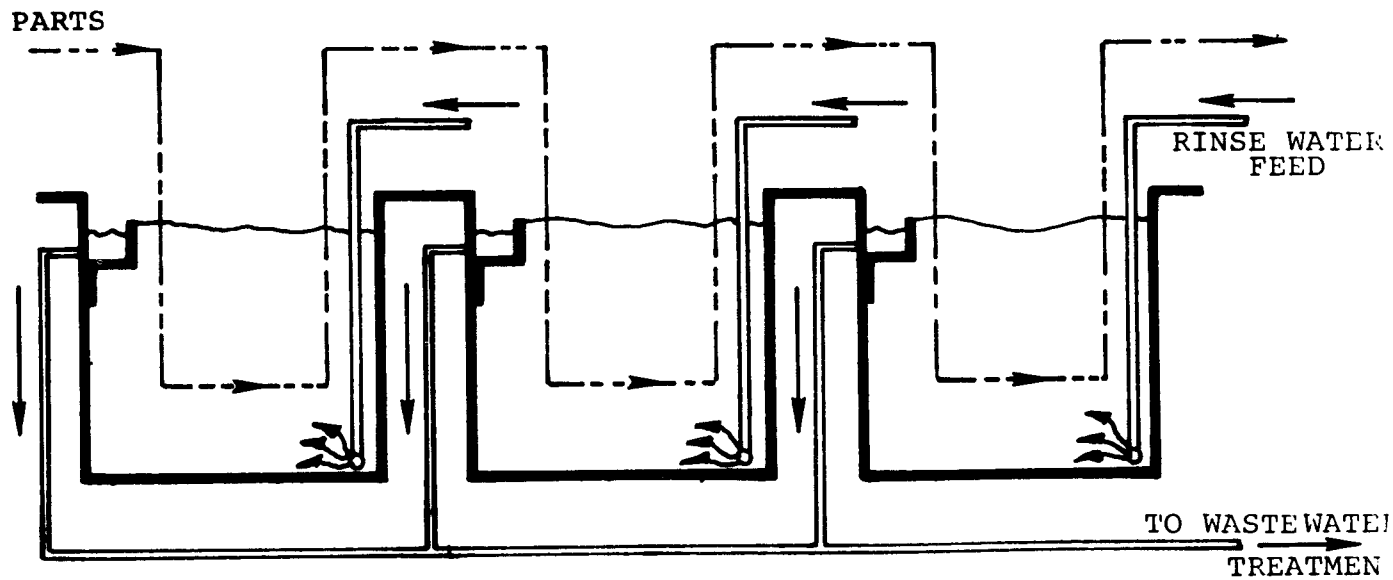

FIGURE 7–4. SERIES RINSE TANKS

controlled since each has a separate feed. Each tank reaches its own equilibrium condition; the first rinse having the highest concentration, and the last rinse having the lowest concentration. This system uses water more efficiently than the single running rinse, and the concentration of dissolved salts decreases in each successive tank.

4. Spray Rinse - Spray rinsing (Figure 7-5) is considered the most efficient of the various rinse techniques in continuous dilution rinsing. The main concern encountered in use of this mode is the efficiency of the spray (i.e., the volume of water contacting the part and removing contamination compared to the volume of water discharged). Spray rinsing is well suited for flat sheets. The impact of the spray also provides an effective mechanism for removing dragout from recesses with a large width to depth ratio.

5. Dead, Still, or Reclaim Rinses - This form of rinsing is particularly applicable for initial rinsing after metal plating because the dead rinse allows for easier recovery of the metal and lower water usage. The rinsing should then be continued in a countercurrent or spray arrangement.

Combined Systems - By combining several rinsing arrangements, an efficient rinse system for a particular application can be achieved. Five systems that are most applicable to electroplating include:

1. Recirculating Spray - This arrangement combines the advantages of the dead and spray rinse. Operating from a captive reservoir (a dead tank), a pump transfers solution to the spray. While not resulting in a final dilution (like all dead rinses), the spray continuously dilutes the dragout on the part, and because of the impact of the spray, contaminant removal is improved.

2. Countercurrent Followed by Spray Rinsing - The feed for the countercurrent tank is from the spray nozzles which are mounted directly over the last countercurrent tank. This provides for high pollutant removal and low water usage.

3. Dead Rinse Followed by Countercurrent Rinse - This arrangement removes up to 80% of the contamination from a part in the dead tank with the remainder being removed in the countercurrent tank. (The removal rate of the dead tank is a function of the frequency of the tank dump.) The dead tank allows for the recovery of dragged out plating solution (principally the metal constituents and chelating agents) and for a lower feed rate of supply water for the countercurrent tank.

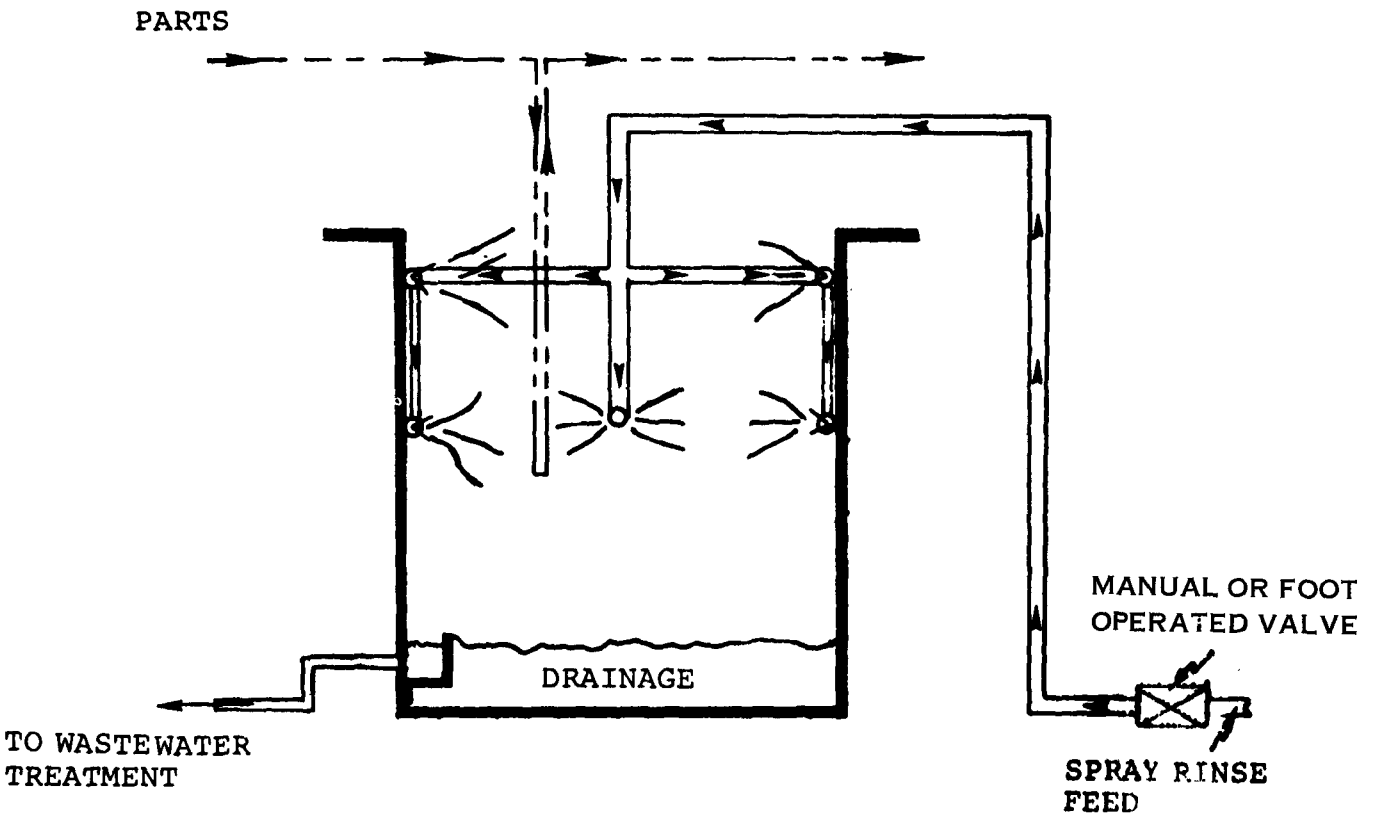

FIGURE 7–5 SPRAY RINSE

4. Drip Station - Drip stations perform the same function as dead tanks, but there is no water in the tank. Instead, the parts are allowed to drain freely over the tank or may be hit by a blast of air (such as from an air knife) or struck by a mixture of air and water. The intent of this station is to remove as much dragout as possible.

5. Closed Loop Countercurrent Rinses - Closed loop rinsing uses the overflow rinse water to make up evaporative losses from the plating bath, and thus, no rinse water is passed to any waste treatment. A general schematic of such a system is shown in Figure 7-6. A liquid level controller in the plating bath senses the level of the bath and operates a transfer pump between the rinse tank and the bath when the liquid level drops below the set level. A liquid level controller in the rinsing tank operates a solenoid valve on the rinse tank water feed line opening the valve when the liquid level drops due to solution pump-out to the plating bath. Use of the system frequently requires several countercurrent tanks and a sufficient evaporation rate from the plating bath. There are numerous advantages to this type of system. No wastewater treatment of overflow rinse waters is required, a large percentage of plating solution drag out is recovered and returned to the plating bath, and the liquid level of the plating bath is automatically controlled requiring no filling by the plating operator and, thus, eliminating the possibility of overfilling the bath. This rinse technique was observed at company ID 6072.

Factors Affecting the Application of Rinse Systems - There is no one rinsing arrangement which provides maximum efficiency of water use for all situations. Selection of the proper rinse arrangement depends upon a number of factors described in the following sections.

1. Geometry of the Part - This partly determines the amount of dragout contributed by a part and is one of the principal determinants for the type of rinsing arrangement selected. A flat sheet with holes is well suited for an impact spray rinse rather than an immersion rinse, but for parts with cups or recesses such as a jet fuel control, a spray rinse is ineffective.

2. Kinematic Viscosity of the Plating Solution - The kinematic viscosity is an important factor in determining plating bath dragout. The effect of increasing kinematic viscosity is that it increases the dragout volume in the withdrawal phase and decreases the rate of draining during the drainage phase. It is advantageous to decrease the dragout and increase the drainage rate. Consequently, the plating solution kinematic

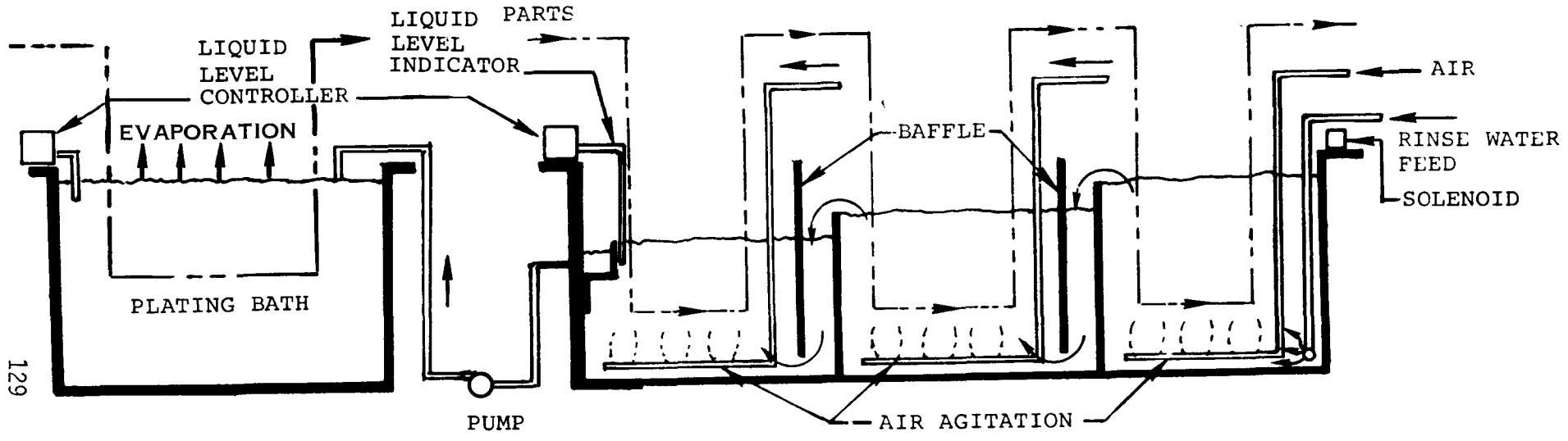

FIGURE 7–6 CLOSED LOOP 3 STAGE COUNTER CURRENT RINSE

viscosity should be as low as possible. Increasing the temperature of the solution decreases its viscosity, thereby reducing the volume of plating solution going to the rinse tank. Care must be exercised in increasing bath temperature, particularly with electroless baths, because the rate of bath decomposition may increase significantly with temperature increases.

3. Surface Tension of the Plating Solution - Surface tension is a major factor that controls the removal of dragout during the drainage phase. To remove a liquid film from a solid surface, the gravitation force must overcome the adhesive force between the liquid and the surface. The amount of work required to remove the film is a function of the surface tension of the liquid and the contact angle. Lowering the surface tension reduces the amount of work required to remove the liquid and reduces the edge effect (the bead of liquid adhering to the edges of the part). A secondary benefit of lowering the surface tension is to increase the metal uniformity in through-hole-metalization. Surface tension is reduced by increasing the temperature of the plating solution or more effectively, by use of a wetting agent.

4. Time of Withdrawal and Drainage - The withdrawal velocity of a part from a solution has an effect similar to that of kinematic viscosity. Increasing the velocity or decreasing the time of withdrawal increases the volume of solution that is retained by the part. Since time is directly related to production rate, it is more advantageous to reduce the dragout volume initially adhering to the part rather than attempt to drain a large volume from the part.

5. Other Factors - There are other factors that enter into the proper application of a particular rinsing arrangement. These include:

   A. Racking - Proper racking of parts is the most effective way to reduce dragout. Parts should be arranged so that no cup-like recesses are formed, the longest dimension should be horizontal, the major surface vertical, and each part should drain freely without dripping onto another part. The racks themselves should be periodically inspected to insure the integrity of the rack coating. Loose coatings can contribute significantly to dragout.

   B. Barrel Operation - There are some significant differences between rack and barrel operations as far as subsequent rinsing is concerned. Typically, barrel

plating solutions are more concentrated and have greater dragout mass than rack operations. Another major difficulty with barrel operations is the maintenance of a well mixed solution between the overall rinse water and the rinse water contained in the barrel. Rotation of barrels in a rinse tank allows for more volume changes of solution, thereby promoting better mixing and rinsing. The depth of barrel immersion is a controlling factor for the number of volume changes per revolution of the barrel. It has been determined that greater volume changes and, therefore, better rinsing occur at more shallow immersion depths. Hence, the immersion depth of a barrel will have a significant effect on rinsing efficiency.

C. Rinse Tank Volume - This has no effect on the equilibrium concentration in a tank. In steady state or pseudosteady state conditions, the equilibrium concentration is a function of dragin and dragout volumes and the flow rate of fresh feed. Tank volume does, however, determine how quickly the equilibrium concentration is reached.

D. Agitation of Rinse Tank - Since rinsing is a dilution process, greater efficiency results if the dragin is diluted with all the water in the rinse tank. Thus, it is advantageous to maintain a well mixed rinse tank. Methods of providing complete mixing include air, ultrasonic or mechanical agitation.

E. Manual or Automatic Plating Line - The type of plating line operation - manual or automatic - may have a significant impact on the cost of installing more efficient rinsing systems. While it may be relatively inexpensive to modify an existing manually operating line, the cost to alter the arrangement of an automatic plating line may be greater, unless existing unused or nonessential tanks in the plating line can be converted to rinse tanks. However, depending on the ingenuity and flexibility of each plater, modifications to obtain more efficient rinsing can be accomplished by: reducing the withdrawal speed of the work pieces, decreasing the surface tension of the plating solution, and installing air-fog nozzles over the plating tank. These modifications can be done without major capital outlays. An advantage of automatic lines is that reproducible results are obtained. This is of particular importance with respect to the withdrawal speed and drainage time. If the automatic machine is set up with dragout control

and production rate in mind, the automatic line typically provides better control over dragout than a manual operation.

F. Rack Design - Physical or geometrical design of racks is of primary concern for the control of dragout both from the rack and the parts themselves. Orientation of parts on a rack and the resulting dragout consideration have been discussed previously. Dragout from the rack itself can be minimized by designing it to drain freely such that no pockets of plating solution can be retained. For example, by changing the angle formed by side members of a rack (reference Figures 7-7 and 7-8) from 90 degrees to something less than 90 degrees, the racks will not retain excessive plating solution. This is particularly true for printed board racks; plant ID 11068 changed vendor supplied racks by this type of modification.

Controls Used on Rinse Tanks - There are several ways to control the rinse water feed rate. For lines where production rates are relatively constant, a fixed orifice may be used with good success to control the fresh feed. This technique is inexpensive and has been readily adapted to automatic plating machines. Other controls such as conductivity controllers, liquid level controllers and manually operated valves are better suited for operations with fluctuating production rates or where parts have wide variance in dragout volume. These various control techniques are described below.

1. Conductivity Controllers - Conductivity controllers provide for efficient use and good control of the rinse process. This controller utilizes a conductivity cell to measure the conductance of the solution which , for an electrolyte, is dependent upon the ionic concentration. The conductivity cell is tied to a controller which will open or close a solenoid on the makeup line. As the rinse becomes more contaminated, its conductance increases until the set point of the controller is reached, causing the solenoid to open and allowing makeup to enter. Makeup will continue until the conductance drops below the set point. The advantage of this method of control is that water is flowing only when required.

2. Liquid Level Controllers - These controllers find their greatest use on closed loop rinsing systems. A typical arrangement uses a liquid level sensor in both the plating solution tank and in the first rinse tank, a pump to tranfer solution from the first rinse tank and the plating tank, and a solenoid on the rinse tank makeup water line. When the

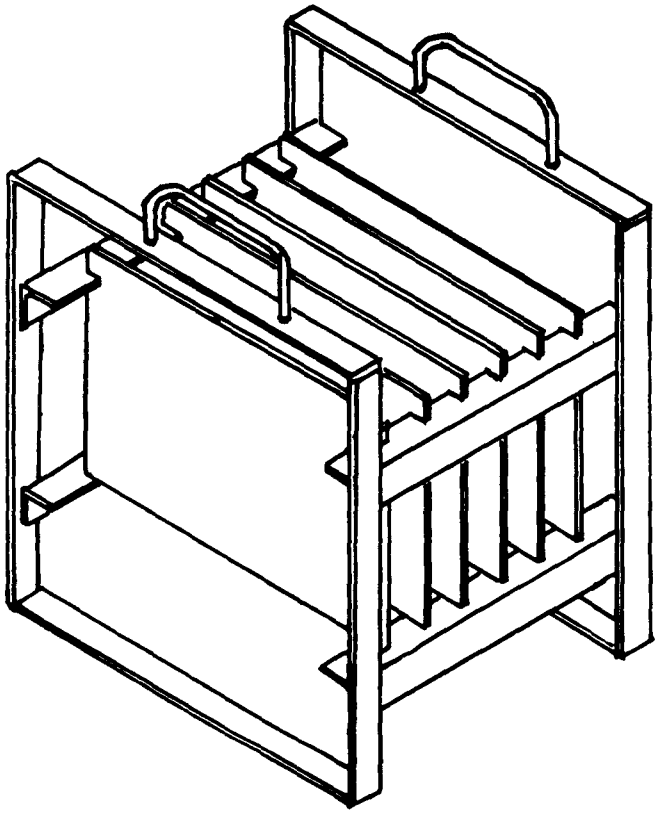

FIGURE 7-7 TYPICAL PRINTED BOARD RACK

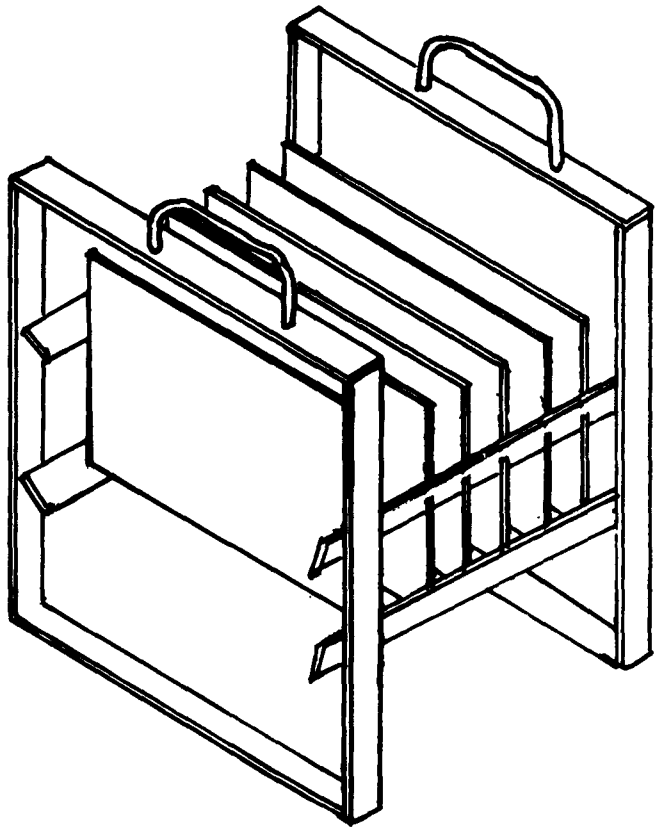

FIGURE 7–8 MODIFIED PRINTED BOARD RACK FOR DRAGOUT CONTROL

plating solution evaporates to below the level of the level controller, the pump is activated, and solution is transferred from the first tank to the plating tank. The pump will remain active until the plating tank level controller is satisfied. As the liquid level of the rinse tank drops due to the pumpout, the rinse tank controller will open the solenoid allowing fresh feed to enter.

3. Manually Operated Valves - Manually operated valves are susceptible to misuse and should, therefore, be installed in conjunction only with other devices. Orifices should be installed in addition to the valve to limit the flow rate of rinse water. For rinse stations that require manual movement of work and require manual control of the rinse (possibly due to low utilization), dead man valves should be installed in addition to the orifice to limit the flow rate of rinse water. They should be located so as to discourage jamming them open.

4. Orifices or Flow Restrictors - These devices are usually installed for rinse tanks that have a constant production rate. The newer restrictors can maintain a constant flow even if the water supply pressure fluctuates. Orifices are not as efficient as conductivity or liquid level controllers, but are far superior to manual valves.

Plating Bath Conservation

If the overflow water from a rinse tank can be reused, it does not have to be treated, and additional water does not have to be purchased. One approach currently in use is to replace the evaporative losses from the plating bath with overflow from the rinse station. This way a large percentage of plating solution normally lost by dragout can be returned and reused. The usefulness of this method depends on the rate of evaporation from the plating bath and the overflow rate from the rinse tank. The evaporation from a bath is a function of its temperature, surface area, and ventilation rate, while the overflow rate is dependent on the dilution ratio, the geometry of the part, and the dragout rates. If the rinse is noncritical, i.e., where the part is going to another plating operation, closing the loop (returning rinse overflow to the plating tank) can be accomplished with far fewer rinse tanks than a critical rinse (following the last plating operation). For example, if a particular line is always used to plate base metals only, and afterwards the work always goes to another process, then this permits a lower flow rate with consequently higher buildup of pollutants in the rinse. Under these conditions, an external concentrator, such as an evaporator, is not required, and the rinse overflow can be used directly for plating bath makeup. The reverse is often true with the

rinse following the final finish plating step. The flow rate in this instance may be high enough that it exceeds the bath evaporation rate and some form of concentrator is required.

When using any rinse arrangement for makeup of evaporative losses from a plating solution, the quality of the rinse water must be known and carefully monitored. Naturally occurring dissolved solids such as calcium and magnesium salts can slowly build up in the plating bath. This can cause the process to go out of control. Even using softened water can cause process control problems. For this reason, deionized water is often used as a feed for rinsing arrangements which will be used for evaporative makeup of plating solutions.

Closing the Loop With A Countercurrent Rinse - This particular arrangement is well suited for use with heated plating baths. The overflow from the countercurrent rinse becomes the evaporative makeup for the plating bath. By installing the proper number of countercurrent tanks, the fresh feed rate for a given dilution ratio is sized to equal the bath's evaporative rate. This arrangement is easily controlled by using liquid level controllers in both the plating bath and rinse tank, a pump to transfer rinse solution to the plating bath, and a solenoid valve on the fresh feed line for the rinse tanks. Company ID 06072 uses this arrangement.

Closing The Loop With Spray Followed By Countercurrent Rinse - The spray followed by countercurrent rinse is well suited for flat sheets and parts without complex geometry. The spray is mounted over the plating bath, and the work is fogged before moving to the countercurrent rinse. A major advantage of this arrangement is that the spray reduces concentration of the dragout on the part, returning the removed portion to the plating tank. This provides for evaporative makeup of the plating bath and a lower water usage and/or number of tanks for the countercurrent rinse.

Closing The Loop With Countercurrent Rinsing Followed By Spray Rinsing - The countercurrent followed by spray rinsing approach can be used when a very clean workpiece (and, therefore, final rinse) is required. The spray is mounted above the last countercurrent rinse tank and becomes the feed for the countercurrent rinse. Depending on the evaporation rate of the plating solution, the evaporative makeup can come from the first countercurrent tank.

Closing The Loop With Dead Rinse Followed By Countercurrent - The dead followed by countercurrent rinse arrangement is particularly useful with parts of a complex geometry. Evaporative losses from the original solution tank can be made up from the dead rinse tank and the required flow for the countercurrent system can be greatly reduced.

Closing The Loop With Recirculatory Spray - When the geometry of the work permits, the recirculating spray offers an improved alternative to the dead rinse. Operating with a captive supply of rinse solution, the solution is sprayed onto the work. The advantage of this system is that the impact of the spray is used to remove dragout, particularly for work with holes in it. The basic equations for concentration buildup hold but are modified by the removal efficiency of the spray. The required flow rate of the spray is dependent on the geometry of the parts, the production rate, and the solution evaporation rate.

Good Housekeeping

Good housekeeping and proper maintenance of plating equipment are required to reduce wastewater loads to the treatment systems. Frequent inspection of racks for loose insulation prevents excessive dragout of plating solutions. Also, periodic inspection of the condition of tank liners and the tanks themselves reduces the chance of a catastrophic failure which could overload the waste treatment device, thereby allowing excessive pollutant discharges. Steps to prevent the mixing of cyanide and iron or nickel wastes should be taken. Proper tank linings in steel tanks prevent the formation of untreatable wastes such as ferrocyanides. Likewise, anode selection must also consider anode constituents to avoid the formation of untreatable wastes. Periodic inspection should also be performed on all auxiliary plating room equipment. This includes inspections of pumps, filters, process piping, and immersion steam heating coils for leaks. Filter replacement should be done in curbed areas or in a manner such that solution retained by the filter is dumped to the appropriate waste stream. Good housekeeping is also applicable to chemical storage areas to preclude a catastrophic failure situation. Storage areas should be isolated from high hazard fire areas and arranged such that if a fire or explosion occurs in such areas, loss of the stored chemicals due to deluge quantities of water would not overwhelm the treatment facilities or cause excessive ground water pollution. Good housekeeping practices also include the use of drain boards between processing tanks. Bridging the gap between adjacent tanks via drain boards allows for recovery of dragout that drips off the parts while they are being transferred from one tank to another. The board should be mounted in a fashion that drains this dragout back into the tank from which it originated.

Chemical Recovery

There are a number of techniques that are utilized to recover and/or reuse plating solutions or etchants. The incentive to recover or reuse may be primarily economical, but the ecological impact of not having to treat these concentrated solutions for discharge should also be considered. The solutions can be reclaimed using any one of a

number of techniques such as reverse osmosis, ion exchange, and evaporation. Some processes include: reuse of spent etchant from a subtractive printed circuit board process as a supply for an additive electroless process bath; recovery of metal from spent plating baths; and continuous regeneration of etchants. These techniques are briefly described below.

Reuse of Spent Etchant - If a facility maintains both an additive and a conventional subtractive line for the manufacturing of printed boards, a two-fold incentive exists for reuse of spent copper etchant. The copper etchant used in a conventional subtractive process is normally dumped when the copper concentration reaches approximately 45,000 mg/l. However, by removing the iron and chromium from the etchant, it can become an inexpensive source of copper for the additive plating baths. This technique can be extended to recover the copper bearing waters from copper etchant rinse tanks as well as from the etch tank and is practiced at company ID 11065. Some type of concentrating device, such as vacuum distillation, may be required to reduce the volume of the rinse.

Recovery of Metal from Spent Plating Baths - Spent plating baths contain a significant percentage of metal in solution. Recovery can be effected by electrolizing the solution at low voltage or by decomposing a hot bath with seed nuclei. The resultant material, while pure, can be refined or sold to recover some of its original value. The advantage of this type of treatment is that a large percentage of the metal is recovered and does not require treatment. This type of metal recovery is performed by companies 17061 and 11065.

Regeneration of Etchants - Regeneration of etchants from a copper etchant solution can be achieved by partially dumping the bath and then adding make up fresh acid and water. If this is done, the etchant life can be extended indefinitely. A method practiced for the regeneration of chromic acid used in the electroless plating of plastics is to oxidize the trivalent chromium back to the active hexavalent chromium. The oxidization is done by an electrolytic cell. Company 20064 regenerates its preplate etchants in this manner. Again, use of this method reduces the amount of material requiring waste treatment.

Process Modification

Process modifications can reduce the amount of water required for rinsing and, thus, reduce the overall load on a waste treatment facility. As an example, for electroless plating, a rinse step can be eliminated by using a combined sensitization and activation solution followed by a rinse instead of a process sequence of sensitization - rinse, activation - rinse. Another potential process modification would be to change from a high concentration plating bath to one with

a lower concentration. Parts immersed in the lower concentration bath require less rinsing (a dilution operation) and, thus, decrease the water usage relative to high concentration baths. The use of non-cyanide plating baths, and phosphate free and biodegradable cleaners, where possible, are material substitutions which reduce the waste load on an end-of-pipe treatment system.

Integrated Waste Treatment

Waste treatment itself can be accomplished on a small scale in the plating room with constant recycling of the effluent. This process is generally known as integrated waste treatment. Integrated treatment uses a treatment rinse tank in the process line immediately following a process tank (plating, chromating, etc.). Treatment solution (usually caustic soda in excess) circulating through the rinse tank reacts with the dragout to form a precipitate and removes it to a clarifier. This clarifier is a small reservoir usually designed to fit near the treatment rinse tank and be an integral part of water use in the production process. Further treatment may take place in the clarifier (cyanide oxidation, chrome reduction) or settling alone may be used to separate the solids. Sludge is removed near the spillover plate on the effluent side of the clarifier, and the effluent is returned to the treatment rinse tank. Consequently, no pollutants are directly discharged by the waste treatment process. Although further rinsing of the parts is required to remove treatment chemicals, this rinse will not contain pollutants from the original process tank, and no further treatment is needed.

INDIVIDUAL TREATMENT TECHNOLOGIES

The following major headings provide descriptions of individual treatment technologies that are used to varying degrees in the electroplating industry. For each technology, a description of the process, its advantages and limitations, its reliability and maintenance requirements, and its demonstration status are discussed.

CHEMICAL REDUCTION OF HEXAVALENT CHROMIUM

Definition of the Process

Reduction is a chemical reaction in which one or more electrons are transferred to the chemical being reduced from the chemical initiating the transfer (reducing agent).

Sulfur dioxide, sodium bisulfite, sodium metabisulfite, and ferrous sulfate form strong reducing agents in aqueous solution and are, therefore, useful in industrial waste treatment facilities for the reduction of hexavalent chromium to trivalent chromium. Reduction of

chromium by ferrous sulfate is most effective at pH levels of less than 3.0.

Description of the Process

The main application of chemical reduction to the treatment of wastewater is in the reduction of hexavalent chromium to trivalent chromium. The reduction enables the trivalent chromium to be separated from solution in conjunction with other metallic salts by alkaline precipitation. Gaseous sulfur dioxide is a reducing agent widely employed for the process. The reactions involved may be illustrated as follows:

$$3SO_2 + 3H_2O = 3H_2SO_3$$

$$3H_2SO_3 + 2H_2CrO_4 = Cr_2(SO_4)_3 + 5H_2O$$

The above reaction is favored by low pH. A pH of from 2 to 3 is normal for situations requiring complete reduction. At pH levels above 5, the reduction rate is slow. Oxidizing agents such as dissolved oxygen and ferric iron interfere with the reduction process by consuming the reducing agent.

A typical wastewater treatment facility used to treat metal finishing wastewaters containing chromates is presented in Figure 7-9. The treatment consists of 45 minutes retention in a reaction tank. The reaction tank is equipped with an electronic device which monitor and control both pH and oxidation reduction potential (ORP). Gaseous sulfur dioxide is metered to the reaction tank to maintain the ORP within the range of 250 to 300 millivolts. Sulfuric acid is added to maintain a pH level of from 1.8 to 2.0. The reaction tank is also equipped with a propeller agitator designed to provide about one turnover per minute. Following reduction of the hexavalent chromium, the waste is combined with other waste streams for final neutralization to a pH of 8 to remove chromium and other metals by precipitation.

A common batch treatment system for chromium reduction has a collection tank and a reaction tank with a four hour retention time. The chromium is reduced by the addition of sodium bisulfite while the pH is controlled by sulfuric acid addition.

Advantages and Limitations

Some advantages of chemical reduction in handling process effluent are as follows:

1. Proven effectiveness within the industry.

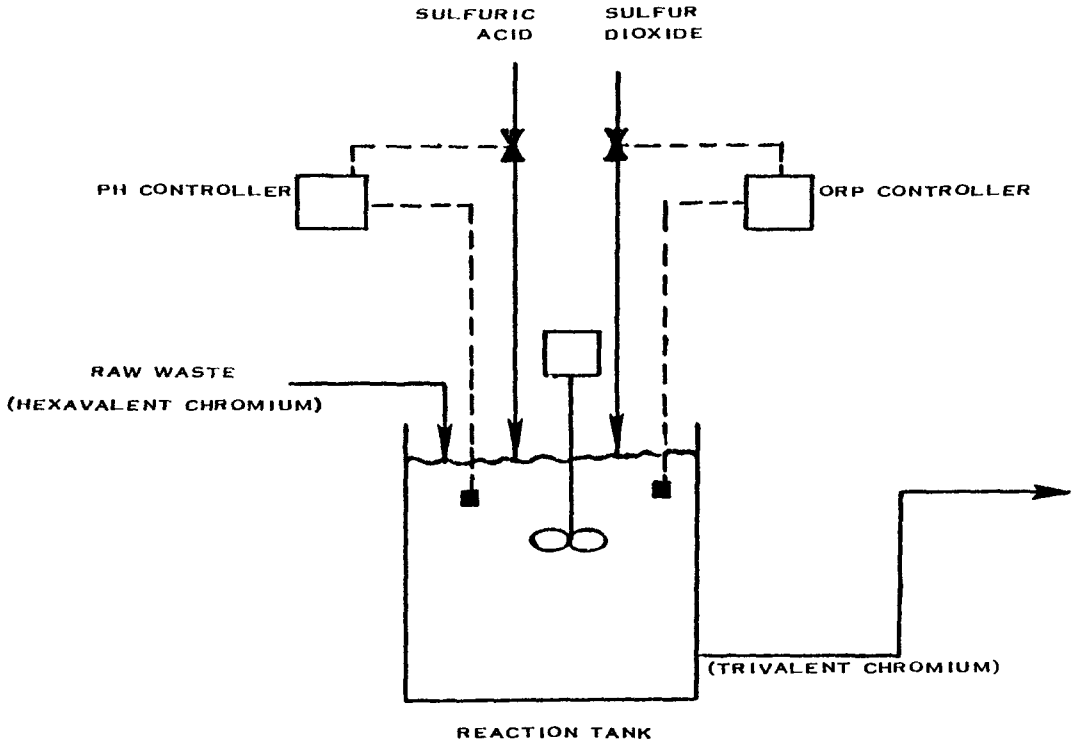

FIGURE 7-9
HEXAVALENT CHROMIUM REDUCTION WITH SULFUR DIOXIDE

2. Processes, especially those using sulfur dioxide, are well suited to automatic control.

3. Operation at ambient conditions, i.e., 15.6 to 32.2 degrees C (60 to 90 degrees F).

Some limitations of chemical reduction for treatment process effluents are as follows:

1. Chemical interference is possible in the treatment of mixed wastes.

2. Careful pH control is required for effective hexavalent chromium reduction.

3. A potentially hazardous situation will exist when sulfur dioxide gas is stored and handled.

Specific Performance

A study of an operational waste treatment facility chemically reducing hexavalent chromium to trivalent chromium has shown that a 99.7% reduction efficiency is possible.

Operational Factors

Reliability - High, assuming proper monitoring and control and proper pretreatment to control interfering substances.

Maintainability - Maintenance consists of periodic removal of sludge.

Collected Wastes - Pretreatment to eliminate substances which will interfere with the process may be necessary. This process produces trivalent chromium which can be controlled by further treatment. There may, however, be small amounts of sludge collected due to minor shifts in the solubility of the contaminants. This is processed in the main sludge treatment equipment.

Demonstration Status

The reduction of chromium waste by sulfur dioxide is a classic process and is found in use by numerous plants employing chromium compounds in operations such as electroplating. One hundred and twenty plants in the data base (196 plants) employed the chemical reduction process in their treatment system and these plants are identified in Table 7-3.

TABLE 7-3

ELECTROPLATING PLANTS THAT CURRENTLY EMPLOY CHEMICAL REDUCTION

116	301	303
304	4003	4030
4031	4032	4033
4034	4035	4069
478	5050	612
629	635	650
6051	6053	662
6072	6073	6074
6076	6077	6078
6079	6083	6084
6085	6086	6087
6088	6358	6381
6731	804	902
1108	1113	1122
11065	1205	1208
1263	12065	15070
1902	1903	1924
19051	19063	19066
2001	2006	2007
2010	2015	2024
2025	20064	20069
20070	20073	20077
20078	20079	20080
20081	20082	20083
20084	20085	20086
20087	2103	2303
2307	23061	2501
2811	3001	3005
3007	3009	3019
3020	30050	30074
31020	31021	31050
3301	3303	3308
3311	3315	3320
3321	3324	3329
3330	3333	3335
33070	33071	33073
33074	3601	3612
36040	36041	40061
40062	4101	41041
4301	43003	44050

pH ADJUSTMENT

Definition of the Process

Wastewater pH is adjusted by addition of an acid or an alkali, depending on the purpose of the adjustment. The most common purpose of wastewater pH adjustment is precipitation of dissolved heavy metals, as illustrated by Figure 7-10.

To accomplish this precipitation, an alkaline substance such as lime is added to the wastewater to increase the pH to at least 8. This decreases the solubility of the metal, which precipitates as a metal hydroxide. The precipitated metal is then often removed from the wastewater by clarification, which is described later in this section.

Adjustment of pH is sometimes used to neutralize wastewater before discharge to either a stream or a sanitary sewer. This may involve neutralization of alkaline wastewater with an acid, neutralization of acid wastewater with an alkali, or neutralization of clarifier overflow with an acid.

Description of the Process

Initial adjustment of pH is usually achieved simply by mixing alkaline and acidic wastewaters. This may be carried out in a collection tank, rapid mix tank, or equalization tank. However, the resulting pH is seldom suitable as preparation either for clarification or sanitary sewer discharge. Consequently, treatment chemicals are usually added.

A variety of treatment chemicals is used. The wastewater is generally acidic, and the chemical most commonly used to increase pH is lime. If substantial sulfur compounds are present in the wastewater, caustic soda (sodium hydroxide) may be used in place of lime to prevent precipitation of calcium sulfate, which increases sludge volume. Soda ash (sodium carbonate) is also sometimes used. Sulfuric acid and hydrochloric acid are used to decrease wastewater pH. Sulfuric acid is less expensive and is used except when formation of sulfate sludge is a problem.

Treatment chemicals for adjusting pH prior to clarification may be added to a rapid mix tank, a mix box, or directly to the clarifier, especially in batch clarification. If metals such as cadmium and nickel are in the wastewater, a pH in excess of 10 is required for effective precipitation. This pH, however, is unacceptable for discharged wastewater, and the pH must therefore be reduced by adding acid. The acid is usually added as the treated wastewater flows through a small neutralization tank prior to discharge.

Advantages and Limitations

Some advantages of pH adjustment in treating process effluents are as follows:

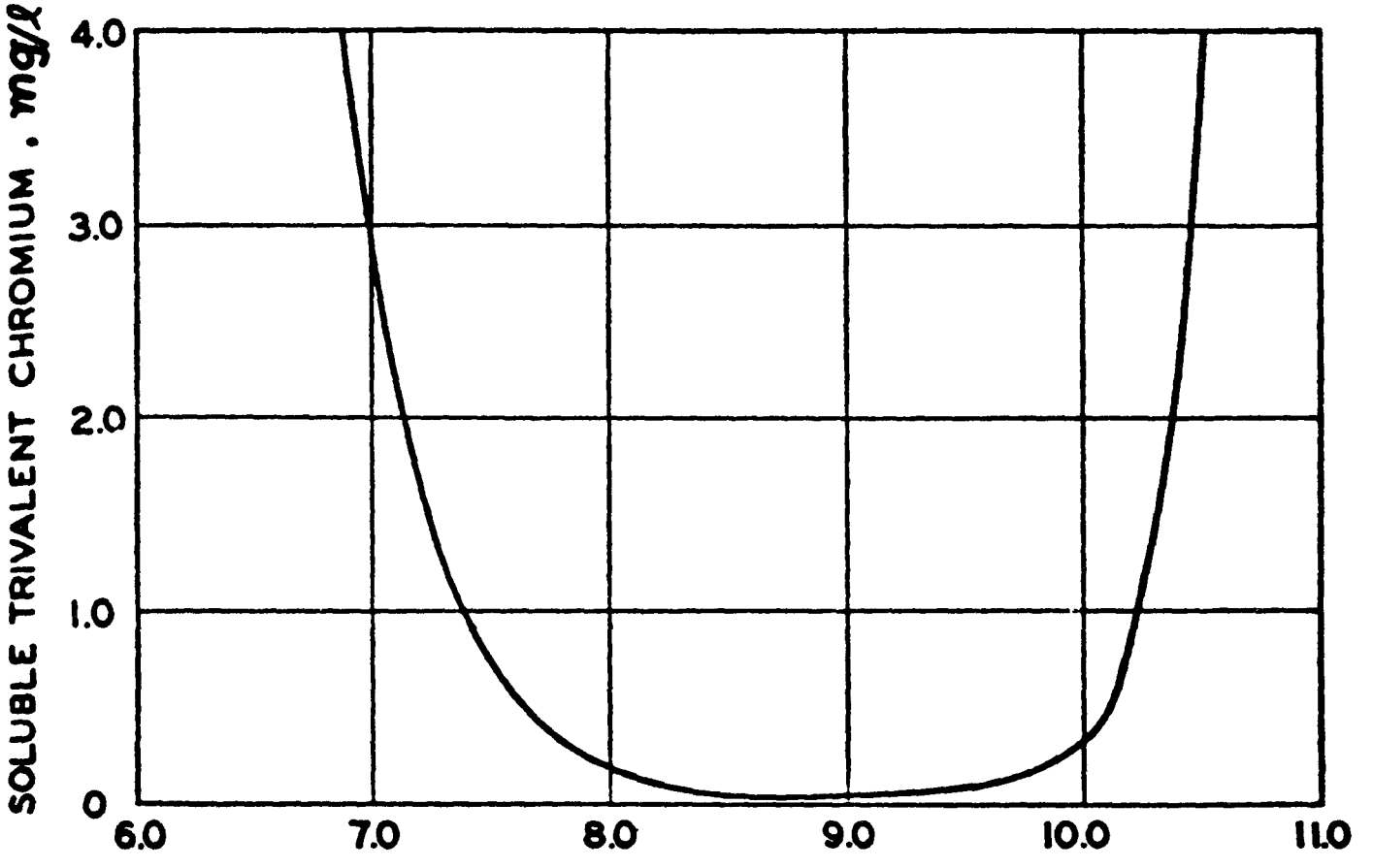

FIGURE 7–10
EFFECT OF PH ON SOLUBILITY OF TRIVALENT CHROMIUM.

1. Proven effectiveness within the industry.

2. Processes are well suited to automatic control.

3. Often aided by necessary "in line" treatments.

4. Operation at ambient conditions, i.e., 15.5 to 32.2 degrees C (60 to 90 degrees F).

Some limitations of pH adjustment for treatment of process effluents are as follows:

1. Chemical interference is possible in the treatment of mixed wastes.

2. Disposal of a substantial quantity of sludge is required.

Operational Factors

Reliability - High assuming proper monitoring and control and proper pretreatment to control interfering substances.

Maintainability - Maintenance consists of assuring proper feeding of treatment chemicals and operation of pH control instrumentation.

Collected Wastes - Precipitated solids must be subsequently removed from the wastewater.

Demonstration Status

The pH adjustment of wastewater is a classic process, used by numerous plants employing electroplating. One hundred and fifty-eight of the plants in the data base used this process (Reference Table 7-4).

CLARIFICATION

Definition of the Process

Clarification is the separation of suspended solids, metal hydroxides, and other settleable impurities that are heavier than water by gravitational settling. This process has been in general industrial use for many years and is currently the most commonly used technique for the removal of settleable material from wastewater.

TABLE 7-4

ELECTROPLATING PLANTS THAT CURRENTLY

EMPLOY pH ADJUSTMENT

116	1113	3008
02062	11050	3009
303	11065	3019
304	11066	3021
405	1205	30050
408	1208	30074
409	1209	3116
4045	12062	31020
4065	1263	31021
4069	12065	31050
4071	1501	3301
4077	15070	3302
478	17061	3305
4087	1902	3306
5020	1903	3308
5021	1924	3309
607	19050	3311
612	19051	3315
635	19063	3320
636	19066	3322
637	2001	3323
650	2006	3324
6051	2010	3327
6053	2013	3329
662	2015	3330
6065	2017	3335
6067	2020	33050
6072	2021	33065
6073	2022	33070
6074	2023	33071
6075	2024	33073
6076	2025	33074
6078	20064	3601
6079	20069	3602
6081	20070	3612
6083	20073	3613
6084	20077	36040
6085	20078	36041
6086	20081	36062
6087	20082	38050
6088	20083	4004
6089	20084	40061

Table 7-4 (con't)

6358	20085	40062
6381	20086	4101
6731	20087	41041
804	2103	41067
805	2303	41069
808	2307	4301
902	2308	43003
907	23061	44050
9026	2501	44061
10020	2809	61001
1108	3007	

Description of the Process

Adjustment of pH, as described earlier, commonly precedes clarification for electroplating wastes. Additionally, inorganic coagulants or polyelectrolytic flocculants may be added to the waste stream following pH adjustment and prior to gravitational separation. These agents are used to enhance settling by coagulating small suspended precipitates into large particles. Common coagulants are aluminum sulfate, sodium aluminate, ferrous or ferric sulfate, and ferric chloride. Organic polyelectrolytes vary in structure, but all usually form larger floccules than coagulants used alone. Depending on the particular application, coagulants and polyelectrolytes may be used together.

A new process currently being employed by one electroplating plant provides clarification and metal removal without prior chromium reduction. In this process, sulfide precipitation, ferric chloride and sodium sulfide are added to the wastewater. These chemicals act as precipitants for phosphate, heavy metals, and suspended solids. The massive floc created by these chemicals binds the chromium, either hexavalent or trivalent, within the precipitate as a chromium iron sulfide complex.

Following chemical treatment, wastewater is fed into a high volume catchment for settling. This catchment may be a lagoon (where enough land is available), a holding tank (for very small flows or batch treatment), or a clarifier. If lagoons or holding tanks with high retention times are used, coagulant addition may not be needed. This type of treatment is referred to as simple sedimentation. Clarifiers, however, are the most commonly used solids settling devices.

The clarifier tank may be circular or rectangular in design and generally employs mechanical sludge collection equipment. Rectangular clarifiers usually collect the sludge at the effluent end of the tank, while circular clarifiers have a sloping funnel-shaped bottom for sludge collection and withdrawal. Bottom slopes of at least 8.33 cm per meter are required for bottom sludge withdrawal. The sludge collection mechanism helps the sludge to overcome inertia and prevents adherence to the bottom.

Once the sludge is collected, it may be pumped out or hydraulically removed from the clarifier. Depending on the impurities present, the retention time and the chemical treatment used, solids concentrations of one to three percent are achievable in the sludge. Recycling of metal hydroxide sludges back to the clarifier inlet results in densification of the sludge.

A common type of clarifier is a circular tank in which the flow is introduced at the center into a feed well which dissipates inlet

velocities (Figure 7-11). The wastewater moves radially from the feed well to the weir and overflow trough at the outside edge of the tank. Settled solids are raked to a hopper near the tank center by arms attached either to a drive unit at the center of the tank or a traction unit operating on the tank wall. To expedite solids removal from clarifiers, some equipment manufacturers have installed inlet nozzles connected to hollow pipe arms instead of scrapers. These nozzles sweep the entire tank bottom on a single revolution. This method of sludge removal is referred to as hydraulic sludge removal. Occasionally circular clarifiers use a surface blade to move floating material to a skimmer.

Advantages and Limitations

The major advantage of simple sedimentation (settling without the aid of coagulants) is the simplicity of the process itself - the gravitational settling of solid particulate waste in a holding tank or lagoon. It is also possible, with small sedimentation tanks, to use hydraulic sludge removal techniques. A disadvantage of simple sedimentation is that long retention times may be necessary to achieve complete settling, especially if the specific gravity of the suspended matter is close to that of water. Some materials cannot be practically removed by sedimentation alone, and chemicals must be added to achieve removal.

The major advantage of clarifiers is that they are effective in removing slow settling suspended matter in a shorter time and in less space than a simple sedimentation system. Improved performance is obtained by an adjustment of the pH to 9 or higher. This increases the rate of flocculation because of pollutant solubility characteristics and, in many cases, improves effluent quality noticeably. This rapid flocculation and removal may require flushing or other maintenance to downstream equipment such as filters, pumps, etc.

The major advantage of sulfide precipitation is that it provides chromium removal without first requiring the reduction of hexavalent chromium to the trivalent state. Chemical costs and sludge production rates are fairly low. One limitation of the process is that hydrogen sulfide gas results from the process. This is a noxious odor in very small quantities and may be objectionable to downwind nearby residential housing. Careful control of the sodium sulfide input can minimize this problem.

Specific Performance - A properly operating clarification system is capable of efficient removal of suspended solids, precipitated metal hydroxides, and other impurities from wastewater. Effectiveness of the process depends on a variety of factors, including the ratio of organics to inorganics, effective charge on suspended particles, and

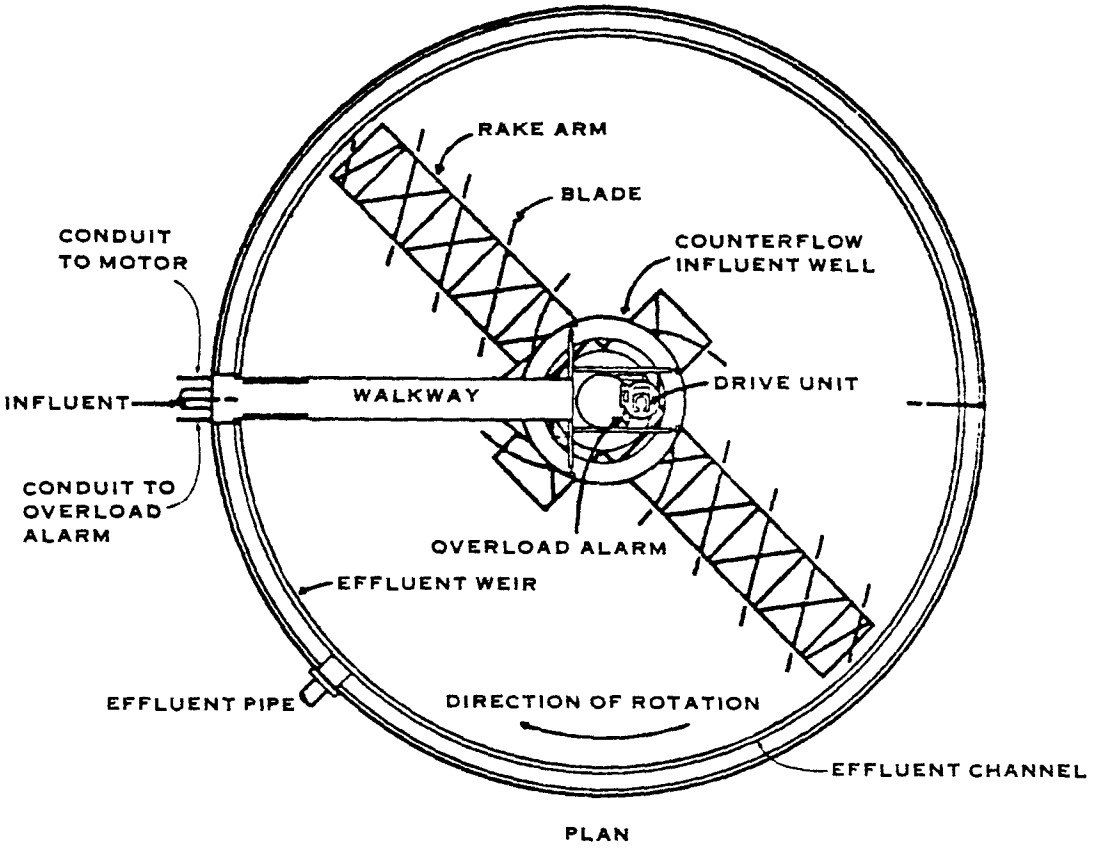

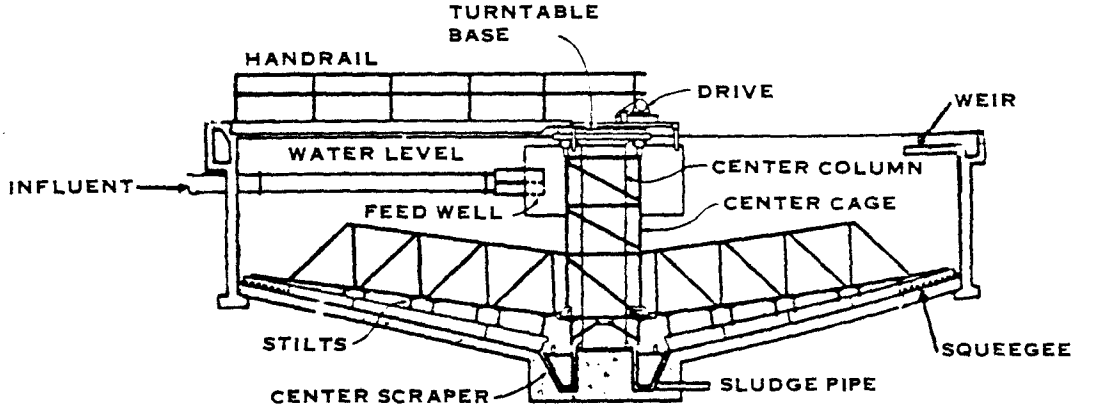

FIGURE 7–11 CIRCULAR CLARIFIER

types of chemicals used in the treatment. Frequently, two or more chemicals are used for treatment, and the proper quantities are usually best determined by laboratory analysis.

The performance of a simple sedimentation process is a function of the retention time for batch sedimentation, surface loading for flow-through sedimentation, particle size and density, and precipitation aids used, if any. The removal efficiency for a given settling time requires consideration of the entire range of settling velocities in the system. This may be accomplished by use of a settling column or by use of sieve analyses and hydrometer tests, the results of which must be analytically combined to obtain settling velocities of each particle size. The average pollutant removal performance for a group of typical plants visited during the project is discussed in Sections IX and XII.

Operational Factors

The clarification process has been in general use for many years and is currently the most commonly used technique for the removal of settleable material from wastewater. This wide utilization has resulted in high reliability. Corrosion due to caustic chemicals used for pH adjustment may cause premature failures. Care must be taken to minimize leakages of chemicals. Proper maintenance should also be carried out to minimize failures.

Maintainability - When clarifiers are used, the associated system utilized for chemical addition, stirring, and sludge dragout must be maintained on a regular basis. Systems external to the clarifier tank present minimal problems from a system operation viewpoint, while systems within the clarifier may require emptying for maintenance to be accomplished. Routine maintenance will generally consist of lubrication, checking for excessive wear, and part replacement, as required. When lagoons are used, maintenance problems similar to those above exist for the chemical treatment aspect, but the lagoon itself requires little maintenance other than periodic sludge removal.

Collected Wastes - The sludge collected from clarification is usually dewatered and then either buried in a landfill, incinerated, or hauled away by a contractor.

Demonstration Status

Clarification and other solids settling techniques represent the typical method of solids removal and were employed in 151 of the 196 plants in this data base. Table 7-5 identifies plants in the data base already employing clarification. Clarifiers are the most commonly used settling device because of their size advantage and effectiveness for many wastewater constituents and have been in

general use for many years. This is evidenced by the fact that over two-thirds of the plants employing solids settling used clarifiers. Lagooning was practiced in 60 of these plants (20 plants used both clarifiers and lagoons).

DIATOMACEOUS EARTH FILTRATION

Definition of the Process

Diatomaceous earth filtration, combined with pH adjustment and precipitation, is a solids separation device which is an alternative to settling for suspended solids removal. The diatomaceous earth filter is used to remove metal hydroxides and other solids from the wastewater and provides an effluent of high quality.

Description of the Process

A diatomaceous filter is comprised of a filter, a filter housing and associated pumping equipment. The filter element consists of multiple peat screens which are coated with diatomaceous earth. The size of the filter is a function of flow rate and desired operating time between filter cleanings.

TABLE 7-5

PLANTS CURRENTLY USING A SYSTEM INCLUDING CLARIFICATION

2062	301	19063	2006
303	304	2007	2010
4003	408	2020	20069
4030	4031	20070	20073
4032	4033	20078	20079
4034	4035	20080	20082
4045	4065	20083	20084
4069	4071	20085	20086
4077	5020	20087	23061
5021	5050	2811	3001
607	635	3003	3007
637	6051	3008	3009
6053	662	3019	3021
6065	6072	30050	3116
6073	6075	31021	3308
6076	6077	3311	3315
6078	6081	3320	3321
6083	6084	3322	3323
6085	6086	3324	3327
6087	6088	3329	33050
6358	6381	33070	33071
804	808	33073	3601
902	10020	3602	3612
1108	1122	36040	40061
1208	11050	4101	41041
12062	1209	4301	43003
1302	1263		
17061	15070		
1924	1902		
	19050		

Normal operation of the system involves pumping a mixture of diatomaceous earth and water through the screen leaves. This deposits the diatomaceous earth filter media on the screens and prepares them for treatment of the waste water. Once the screens are completely coated, the pH adjusted wastewater can be pumped through the filter. The pH adjustment and precipitation tank perform the same functions in this system as in clarification, i.e. they transform dissolved metal ions into suspended metal hydroxides. The metal hydroxides and other suspended solids are removed from the effluent in the diatomaceous earth filter. The buildup of solids in the filter increases the pressure drop across the filter. At a certain pressure, the waste water is stopped, the filter is cleaned and the cycle is restarted.

Advantages and Limitations

The principal advantage to using a diatomaceous earth filter is the reduction in size of the waste treatment system compared to a system using a clarifier. The filter system can be installed within an existing plant structure even in cases where very little free floor space is available. The filter system's performance is comparable with that of a clarifier. One additional advantage is the sludge removed from the filter is much drier than that removed from a clarifier (approx. 50% solids). This high solids content can significantly reduce the cost of hauling and landfill.

The major disadvantage to the use of a filter system is an increase in operation and maintenance costs. In some cases this increase in O & M costs is offset by the lower capital costs required when not investing in land and outside construction.

Specific Performance

A properly operating filter system has demonstrated the following performance.

	Removal Percent	Raw Waste	Effluent
Total Suspended Solids	98%	524	10
Zinc	99%	13.4	0.139
Trivalent Chromium	95%	12.2	0.611
Iron	96%	5.81	0.248
Copper	94%	7.53	0.444
Nickel	98%	2.57	0.044

These figures are from an actual plant operating system visited and sampled (ID 36041). Other plants visited, such as ID's 06731 and 09026, also had operating diatomaceous earth filters and similar effluent levels.

Demonstration Status

Filters with similar operating characteristics to that described above are in common use throughout the electroplating industry. They are employed by 5 plants in the data base.

The ID numbers of the plants using diatomaceous earth filtration are listed below:

6731
9026
31020
33073
36041

FLOTATION

Definition of the Process

Flotation is the process of causing particles such as metal hydroxides to float to the surface of a tank where they can be concentrated and removed. This is accomplished by increasing the buoyancy of the solid particles by releasing gas bubbles which attach to the solid particles causing them to float. In principle, this process is the opposite of sedimentation.

Flotation may be performed in several ways; froth, dispersed air, dissolved air, gravity, and vacuum flotation are the most commonly used techniques. Chemical additives may also be used to enhance the performance of the flotation process.

Flotation is used primarily in the treatment of wastewater containing large quantities of industrial wastes that carry heavy loads of finely divided suspended solids and grease. Solids having a specific gravity only slightly greater than 1.0, which would require abnormally long sedimentation times, may be removed in much less time by flotation.

Description of the Process

The principal difference between types of flotation is the method of generation of the minute gas bubbles, usually air, in a suspension of water and small particles. The use of chemicals to improve the efficiency may be employed with any of the basic methods. The following paragraphs describe the different flotation techniques and the method of bubble generation for each process.

Froth Flotation - Froth flotation is based on the utilization of differences in the physiochemical properties in various particles.

Wettability and surface properties affect the particles' ability to attach themselves to gas bubbles in an aqueous medium. In froth flotation, air is blown through the solution containing flotation reagents. The particles in the solution, with water repellant surfaces, stick to air bubbles as they rise and are brought to the surface. A mineralized froth layer, with mineral particles attached to air bubbles, is formed. Particles of other minerals which are readily wetted by water do not stick to air bubbles and remain in suspension.

Dispersed Air Flotation - In dispersed air flotation, gas bubbles are generated by introducing the air by mechanical agitation with impellers or by spraying air through porous media. Dispersed air flotation is used in the metallurgical industry.

Dissolved Air Flotation - In dissolved air flotation, bubbles are produced as a result of the release of air from a supersaturated solution. There are two types of contact between the gas bubbles and particles. The first type is predominant in the flotation of flocculated materials and involves the entrapment of rising gas bubbles in the flocculated particles as they increase in size. The bond between the bubble and particle is one of physical capture only. The second type of contact is one of adhesion. Adhesion results from the intermolecular attraction exerted at the interface between the solid and gaseous phases.

Vacuum Flotation - This process consists of saturating the wastewater with air either 1) directly in an aeration tank, or 2) by permitting air to enter on the suction of a wastewater pump. A partial vacuum is applied, which causes the dissolved air to come out of solution as minute bubbles. The bubbles attach to solid particles and rise to the surface to form a scum blanket, which is normally removed by a skimming mechanism. Grit and other heavy solids that settle to the bottom are generally raked to a central sludge pump for removal. A typical vacuum flotation unit consists of a covered cylindrical tank in which a partial vacuum is maintained. The tank is equipped with scum and sludge removal mechanisms. The floating material is continuously swept to the tank periphery, automatically discharged into a scum trough, and removed from the unit by a pump also under partial vacuum. Auxiliary equipment includes an aeration tank for saturating the wastewater with air, a tank with a short retention time for removal of large air bubbles, vacuum pumps, and sludge and scum pumps.

Advantages and Limitations

Because flotation is dependent on the surface characteristics of the particulate matter, laboratory and pilot plant tests must usually be performed to yield the necessary design criteria. Factors that must

be considered in the design of flotation units include the concentration of particulate matter, quantity of air used, the particulate rinse velocity, and the solids loading rate.

Specific Performance

The performance of a flotation system depends upon having sufficient air bubbles present to float substantially all of the suspended solids. An insufficient quantity of air will result in only partial flotation of the solids, and excessive air will yield no improvement. The performance of a flotation unit in terms of effluent quality and solids concentration in the float can be related to an air/solids ratio as shown in Figure 7-12. It should be noted that the shape of the curve obtained will vary with the nature of the solids in the feed.

The primary variables for flotation design are pressure, feed solids concentration, and retention period. The effluent suspended solids decrease, and the concentration of solids in the float increase with increasing retention period. When the flotation process is used primarily for clarification, a detention period of 20 to 30 minutes is adequate for separation and concentration.

Operational Factors

Reliability - The reliability of a flotation system is normally high and is governed by the sludge collector mechanism and by the motors and pumps used for aeration.

Maintainability - Routine maintenance is required on the pumps and motors. The sludge collector mechanism is subject to possible corrosion or breakage and may require periodic replacement.

Collected Wastes - Chemicals are commonly used to aid the flotation process. These chemicals, for the most part, function to create a surface or a structure that can easily adsorb or entrap air bubbles. Inorganic chemicals, such as the aluminum and ferric salts and activated silica, can be used to bind the particulate matter together and, in so doing, create a structure that can easily entrap air bubbles. Various organic chemicals can be used to change the nature of either the air-liquid interface or the solid-liquid interface, or both. These compounds usually collect on the interface to bring about the desired changes.

Demonstration Status

Flotation units are commonly used in industrial operations to remove emulsified oils and grease as well as dissolved solids with a specific

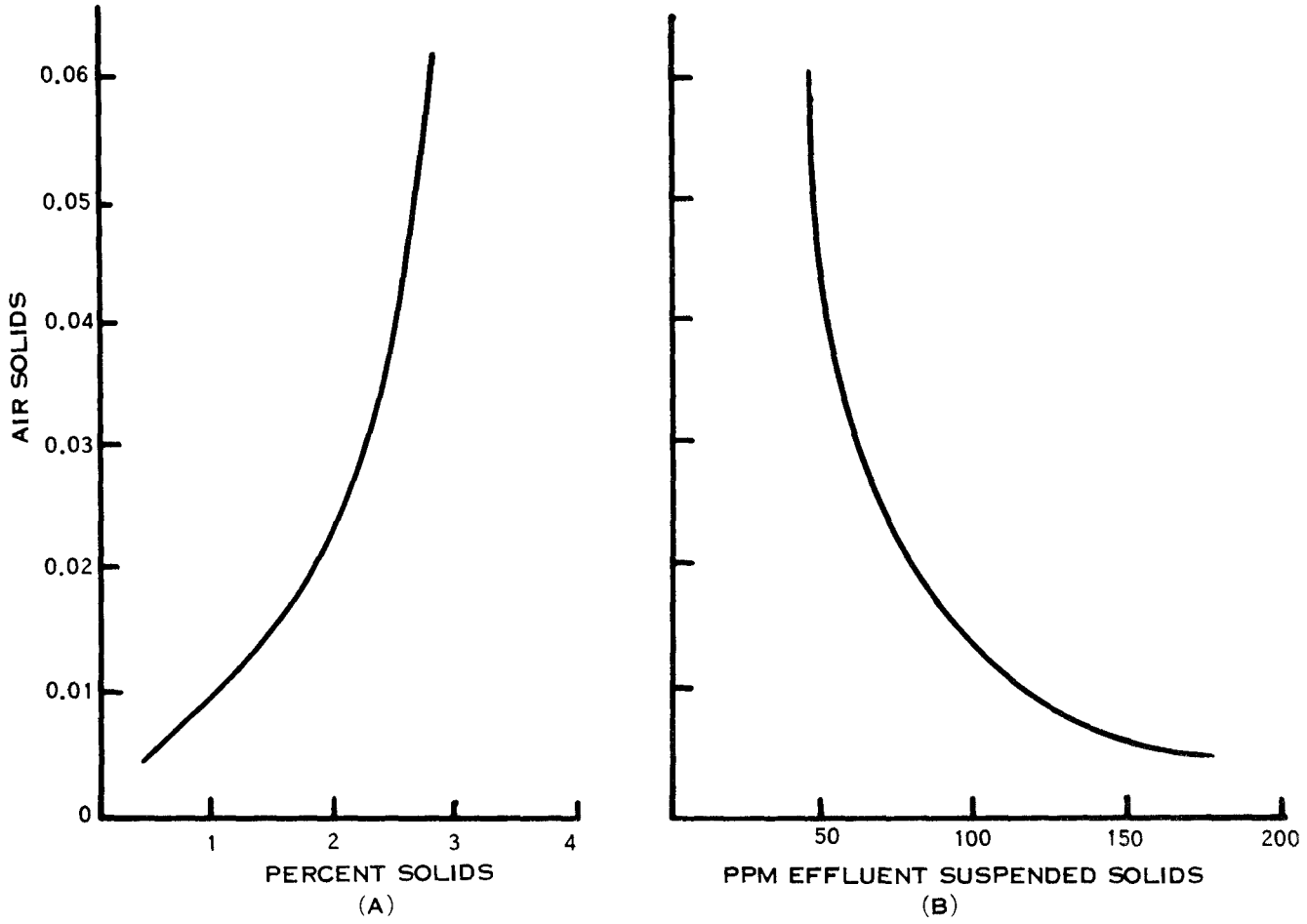

(A) THE RELATIONSHIP BETWEEN AIR/SOLIDS RATIO AND FLOAT-SOLIDS CONCENTRATION.
(B) THE RELATIONSHIP BETWEEN AIR/SOLIDS RATIO AND EFFLUENT SUSPENDED SOLIDS.

FIGURE 7--12
AIR/SOLIDS RATIO

gravity close to water. In the 196 plant data base, this process was employed by six plants (ID's 5050, 902, 2017, 2307, 4101, and 41041).

In addition, a Swedish company has developed a "micro flotation system" which uses hydrostatic pressure to control the aeration step by means of which suspended solids are swept to the surface. Several plants are in operation with metal plating and pickling liquors, chemicals, dye stuff, paper, glue, and sewage being treated with this system. Solids removal is reported to be 90-99%. The most significant factor in the operation of this system is that small bubbles, typically 5-50 microns, are released very gradually, causing twice as many bubbles with a higher affinity for solids, and the gradual release is less disruptive to sludge formation.

OXIDATION BY CHLORINE

Definition of the Process

Oxidation is a chemical reaction in which one or more electrons are transferred from the chemical being oxidized to the chemical initiating the transfer (oxidizing agent).

Chlorine, in elemental or hypochlorite salt form, is a strong oxidizing agent in aqueous solution and is used in industrial waste treatment facilities primarily to oxidize cyanide.

Description of the Process

Cyanide Wastes - Chlorine as an oxidizing agent is primarily used in industrial waste treatment to oxidize cyanide. This classic procedure can be approximated by the following two step chemical reaction:

1. $Cl_2 + NaCN + 2NaOH = NaCNO + 2NaCl + H_2O$
2. $3Cl_2 + 6NaOH + 2NaCNO = 2NaHCO_3 + N_2 + 6NaCl + 2H_2O$

The reaction indicated by equation (1) represents the oxidation of cyanides to cyanates. The oxidation of cyanides to cyanates is accompanied by a marked reduction in volatility and a thousand fold reduction in toxicity.

The reaction presented as equation (2) for the oxidation of cyanate is the final step in the oxidation of cyanide to carbon dioxide and nitrogen.

A typical wastewater treatment facility is shown in Figure 7-13 and illustrates modern practice for treating electroplating wastewaters containing cyanides. Continuous flow treatment facilities are provided for cyanide-bearing wastes which are discharged from plating

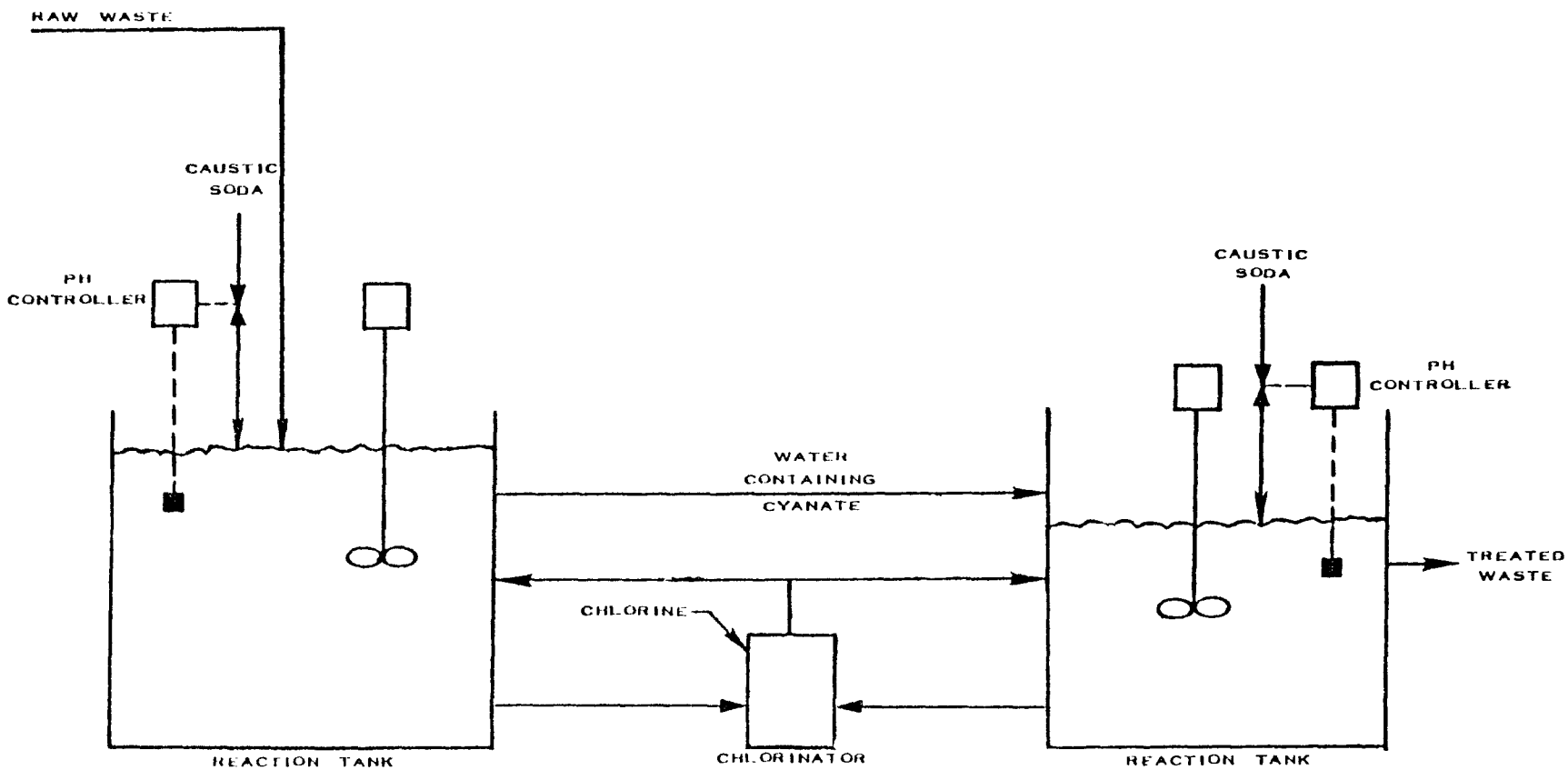

FIGURE 7–13
TREATMENT OF CYANIDE WASTE BY ALKALINE CHLORINATION

operations. In plating operations, copper, zinc, gold and cadmium may be plated from cyanide baths.

The cyanide waste from these plating solutions is treated by the alkaline chlorination process for oxidation of cyanides to carbon dioxide and nitrogen. The treatment commonly consists of an equalization tank followed by several reaction tanks connected in series. Each retention tank has an electronic recorder-controller to maintain required conditions with respect to pH and oxidation reduction potential (ORP). In the first reaction tank, conditions are adjusted to oxidize cyanides to cyanates. To effect the reaction, chlorine is metered to the reaction tank as required to maintain the ORP in the range of 350 to 400 millivolts, and 50% aqueous caustic soda is added to maintain a pH range of 9.5 to 10. In the following reaction tanks, conditions are maintained to oxidize cyanate to carbon dioxide and nitrogen. The desirable ORP and pH for this reaction are 600 millivolts and 8.0, respectively. Each of the reaction tanks is equipped with a propeller agitator designed to provide approximately one turnover per minute.

Batch treatment is an alternative to the system comprised of the equalization tank and several reaction tanks. In batch treatment, a single tank holds the daily wastewater flow. The chemicals are added at the end of daily operation and sufficient retention time to accomplish the desired reaction is allowed before discharging the wastewater.

Advantages and Limitations

Some advantages of chlorine oxidation for handling process effluents are as follows:

1. Lowest cost and convenience of application.

2. Process is well suited to automatic control.

3. Operation at ambient environments, i.e., 15.5 to 32.2 degrees C (60 to 90 degrees F).

Some limitations or disadvantages of chlorine oxidation for treatment of process effluents are listed below.

1. Toxic, volatile intermediate reaction products must be controlled by careful pH adjustment.

2. Chemical interference is possible in the treatment of mixed wastes.

3. A potentially hazardous situation exists when chlorine gas is stored and handled.

Specific Performance

The following efficiency figures were generated by a study of an operational waste treatment facility using chlorine as an oxidant.

Parameter	Percentage Reduction (1)
Cyanide	99.6
Phenol	100
Color	99
Turbidity	99.4 (2)
Odor	85

(1) Optimum conditions assumed
(2) Variable depending on exact nature of contaminant.

Detailed analysis of cyanide reduction in electroplating plants is contained in Section XII.

Operational Factors

Reliability - High, assuming proper monitoring and control and proper pretreatment to control interfering substances.

Maintainability - Maintenance consists of periodic removal of sludge.

Collected Wastes - Pretreatment to eliminate substances which will interfere with the process may be necessary. Dewatering of sludge generated in the chlorine oxidation process or in an "in line" process may be desirable prior to contractor removal or disposal to a landfill.

Demonstration Status

The oxidation of cyanide wastes by chlorine is a classic process and is found in most plants using cyanides in electroplating operations. Ninety companies in the data base employed this waste treatment process (Reference Table 7-6).

OXIDATION BY OXYGEN

Oxygen, in a pure form or in its allotropic form (ozone), is an oxidizing agent. Air and oxygen are not considered effective as chemical agents in the treatment of industrial waste, i.e. cyanide wastes are not oxidized to dischargeable concentrations. Ozone, therefore, is the only oxygen form used extensively in industrial chemical waste treatment. Ozone as an oxidizing agent is primarily used to oxidize cyanide to cyanate and to oxidize phenols and chromophores to a variety of colorless nontoxic products. The cyanide oxidation can be illustrated by the following ionic equation:

$$CN(-1) + O_3 = CNO\ (-1) + O_2$$

The reaction indicated by the above equation represents the oxidation of cyanides to cyanates.

Since ozone will not readily effect further oxidation, breakdown of the cyanate waste is dependent on processes such as hydrolysis and bio-oxidation.

A typical ozone plant for wastewater treatment is shown in Figure 7-14.

Advantages and Limitations

Some advantages of ozone oxidation for handling process effluents are as follows:

1. Reaction product (oxygen) is beneficial to receiving waters.

2. On site generation eliminates procurement and storage problems.

3. Process is well suited to automatic control.

4. Operation at ambient conditions, i.e., 15.5 to 32.2 Degrees C (60 to 90 Degrees F).

Some limitations or disadvantages of ozone oxidation for treatment of process effluents are listed below.

1. High initial cost.

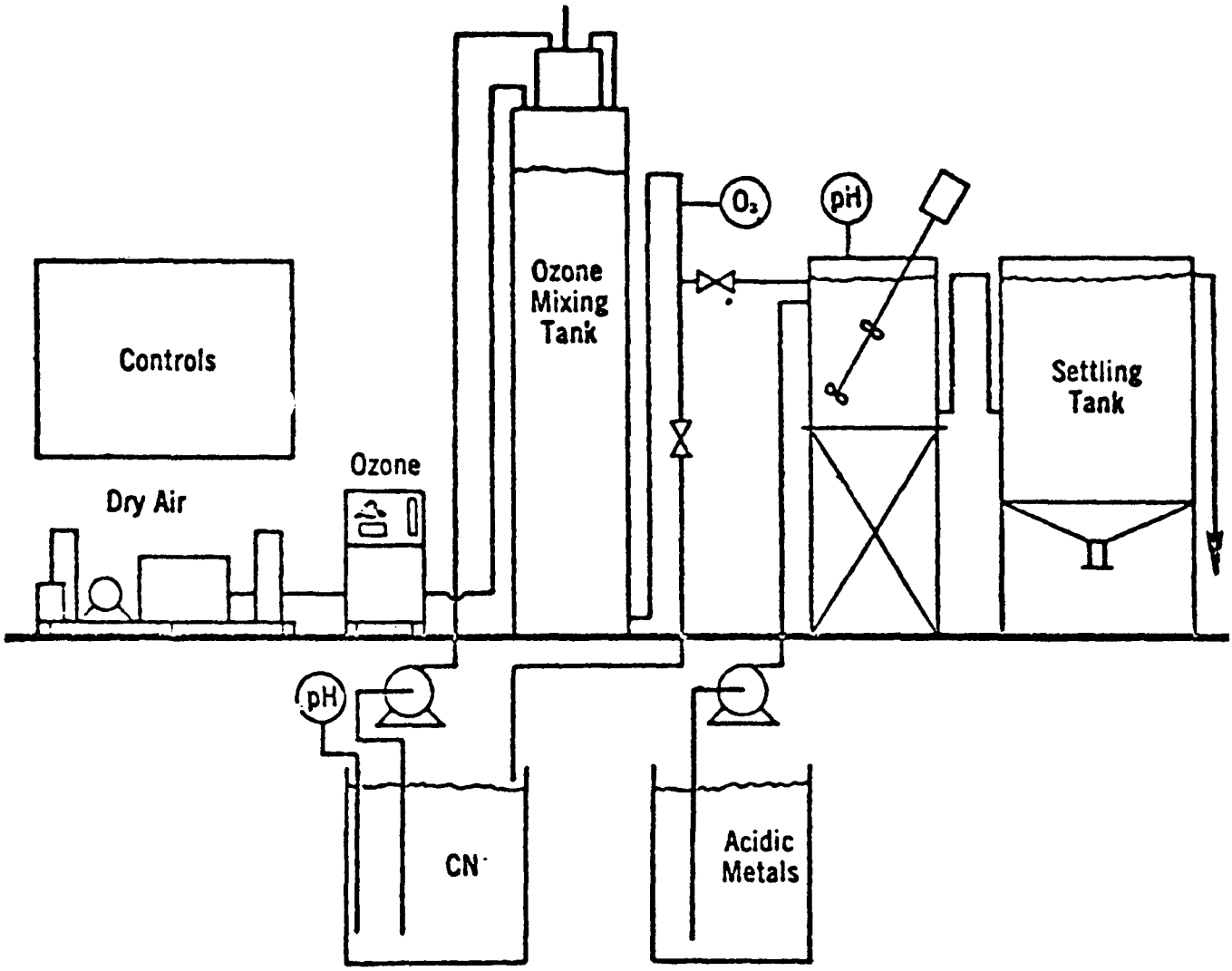

FIGURE 7–14
TYPICAL OZONE PLANT FOR WASTE TREATMENT

TABLE 7-6

ELECTROPLATING PLANTS THAT CURRENTLY EMPLOY OXIDATION BY CHLORINE

116	10020	23061
304	1108	2501
4045	1113	2809
478	1203	2811
5021	1205	3001
607	1208	3003
629	1263	3005
635	1302	3007
637	1501	3008
650	15070	3021
6051	1902	31021
6053	19050	3301
662	19051	3306
6072	2001	3311
6073	2006	3315
6075	2007	3320
6077	2017	3321
6078	2021	3324
6079	20073	3327
6081	20077	3330
6084	20078	33065
6085	20079	33070
6087	20080	33071
6089	20081	33073
6358	20082	3601
6381	20084	3612
804	20086	36040
808	20087	36041
902	2103	4301
9026	2303	44061

2. Chemical interference is possible in the treatment of mixed wastes.

3. Cyanide is not effectively oxidized beyond the cyanate level.

Specific Performance

Tests carried out in France on the effluent from a large metal finishing factory showed that an ozone dose of 80 to 90 mg/liter could remove 25 mg/liter of cyanide. The results of initial pilot tests are as follows:

Cyanide content of effluent before ozonation = 25 mg/liter
Cyanide content of effluent after ozonation = 0

	Concentration of ozone in air (g/cu m)		
	7	14	20
Total ozone applied	7.3	5.7	4.0
Ozone lost to atmosphere (kg/kg cyanide)	3.8	2.5	0.0
Ozone used in destruction of cyanide (kg/kg cyanide)	3.5	3.2	4.0

Operational Factors

Reliability - High, assuming proper monitoring and control and proper pretreatment to control interfering substances.

Maintainability - Maintenance consists of periodic removal of sludge, and periodic renewal of filter(s) and desiccator(s) required for the input of clean dry air.

Collected Wastes - Pretreatment to eliminate substances which will interfere with the process may be necessary. Dewatering of sludge generated in the ozone oxidation process or in an "in line" process may be desirable prior to contractor removal or disposal to a landfill.

Demonstration Status

None of the plants in the electroplating data base employed this waste treatment process. The first commercial size plant using ozone in the treatment of cyanide waste was installed by a manufacturer of

aircraft. This plant is capable of generating 54.4 kg (120 pounds) of ozone per day. The amount of ozone used in the treatment is approximately 20 milligrams per liter. In this process, the cyanide is first oxidized to cyanate, and the cyanate is then hydrolyzed to CO_2 and NH_3. The final effluent from this treatment passes into a lagoon. Because of an increase in the waste flow, the installation has been expanded to produce 163.3 kg (360 pounds) of ozone per day.

DEEP BED FILTRATION

Definition of the Process

Suspended solids are commonly removed from wastewater streams by filtering through a deep 0.3-0.9 m (1-3 feet) granular filter bed. The porous bed formed by the granular media can be designed to remove practically all suspended particles. Even colloidal suspensions (roughly 1 to 100 microns) are adsorbed on the surface of the media grains as they pass in close proximity in the narrow bed passages.

Description of the Process

Filtration is basic to water treatment technology, and experience with the process dates back to the 1800's. Filtration occurs in nature as the surface ground waters are purified by sand. Silica sand, anthracite coal, and garnet are common filter media used in water treatment plants. These are usually supported by gravel. The media may be used singularly or in combinations. The multi-media filters may be arranged to maintain relatively distinct layers (multi-layered) by virtue of balancing the forces of gravity, flow, and buoyancy on the individual particles. This is accomplished by selecting appropriate filter flow rates (liters/min/sq meter (gpm/sq ft)), media grain size, and density.

In recent years, vast improvements have been realized in filtration efficiency by the use of mixed media filtration beds, wherein the process water passes from coarse to fine bed characteristics. In mixed media beds, the various media and operating parameters are selected to achieve a natural mixing of the media which yields the relatively continuous variation of bed characteristics desired.

Deep bed filtration process equipment can be further defined in terms of other major operating characteristics. The most common filtration approach is the conventional gravity filter which normally consists of a deep bed granular media in an open top tank of concrete or steel. The direction of flow through the filter is downward, and the flow rate is dependent solely on hydrostatic pressure of the process water above the bed.

A variation of the gravity filter is commonly referred to as a pressure filter (see Figure 7-15). In this case, the basic approach is the same as the gravity filter, but it is enclosed in a steel tank and pressurized. Other variations are commonly referred to as uniflow, biflow, radial flow, and horizontal flow.

Additional characteristics used to classify the various deep bed filters are the type(s) of filter media used (multilayered, mixed media) and the flow rates (slow, rapid and fast). But these are all deep bed filters which take advantage of certain economic or operating characteristics for specific conditions in specific applications.

As wastewater is processed through a filter bed, the solids collect in the spaces between the filter particles. Periodically, the filter media must be cleaned. This is accomplished by backwashing the filter (reversing the flow through the filter bed). The flow rate for backwashing is adjusted such that the bed is expanded by lifting the media particles a given amount. This expansion and subsequent motion provides a scouring action which effectively dislodges the entrapped solids from the media grain surfaces. The backwash water fills the tank up to the level of a trough below the top lip of the tank wall. The backwash is collected in the trough and fed to a storage tank and recycled into the waste treatment stream. The backwash flow is continued until the filter is clean.

Auxiliary filter cleaning is sometimes employed in the upper few inches of filter beds. This is conventionally referred to as surface wash and is in the form of water jets just below the surface of the expanded bed during the backwash cycle. These jets enhance the scouring action in the bed by increasing the agitation.

An important feature for successful filtration and backwashing is the underdrain. This is the support structure for the media bed. The underdrain provides an area for collection of the filtered water without clogging from either the filtered solids or the media grains. In addition, the underdrain prevents loss of the media with the water, and during the backwash cycle, it provides even distribution of the flow over the bed. Failure to dissipate the velocity head during the filter or backwash cycle will result in bed upset and major repair.

Several standard approaches are employed for filter underdrains. The simplest one consists of a parallel porous pipe imbedded under a layer of coarse gravel and manifolded to a header pipe for effluent removal. Other approaches to the underdrain system are known as the Leopold and Wheeler filter bottoms. Both of these incorporate false concrete bottoms with specific porosity configurations to provide for drainage and velocity head dissipation.

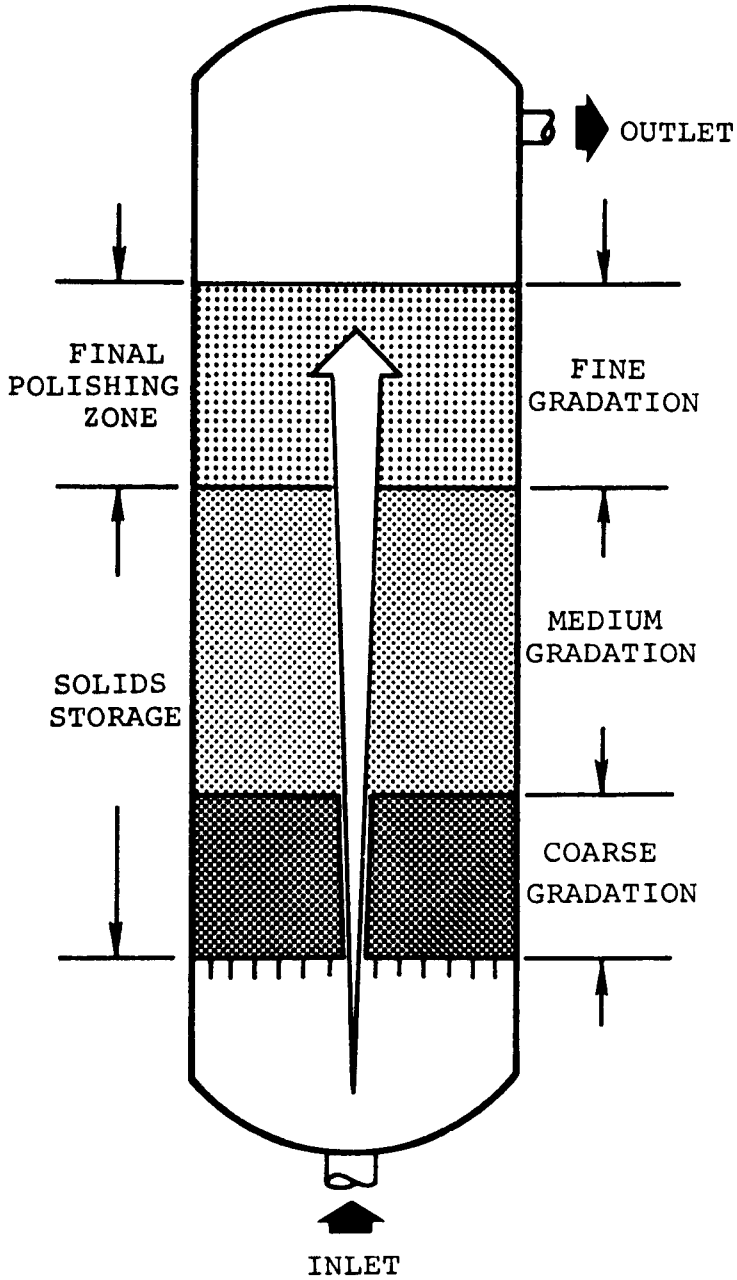

FIGURE 7-15
TYPICAL PRESSURE FILTER

Filter system operation may be manual or automatic. The filter backwash cycle may be on a timed basis, a pressure drop basis with a terminal value which triggers backwash, or a solids carry-over basis from turbidity monitoring of the outlet stream. All of these schemes have been successfully used.

The state-of-the-art in filter technology has progressed during the last twenty-five years to produce improved performance and increased understanding of the basic principles. However, it has not progressed to the point where adequate sizing and performance predictions can be made with confidence prior to testing. The use of pilot plant filters for a specific application is a necessity as part of the engineering design procedure.

Filters in wastewater treatment plants are often employed for polishing following clarification, sedimentation, or other similar operations. Chemical additives which enhance the upstream treatment equipment may or may not be compatible with or enhance the filtration process. It should be borne in mind that in the overall treatment system, effectiveness and efficiency are the objectives, not the performance of any single unit. The flow rates for various types of filters are as follows:

Slow Sand	2.04- 5.30 Liters/Minute/Square Meter
Rapid Sand, Multi-layered	40.74-51.48 Liters/Minute/Square Meter
High Rate Mixed Media	81.48-122.22 Liters/Minute/Square Meter

Advantages and Limitations

The principal advantages of filtration are:

1. Low initial and operating costs.

2. Reduced land requirements over other methods to achieve the same level of solids removal.

3. No chemical additions which add to the discharge stream.

4. Increased flow rates can be handled by paralleling added filter(s).

Some disadvantages encountered with filters are:

1. Require pretreatment if solids level is high (from 100 to 150 mg/l).

2. Operator training is fairly high due to controls and periodic backwashing.

3. Capability limited to suspended solids and oils and greases.

4. Backwash must be stored and dewatered to be economically disposed.

Specific Performance

Properly operating filters following some pretreatment should produce water with less than 0.2 JTU (Jackson Turbidity Units), and mixed media filters can process water having average turbidities as high as 50 JTU without pretreatment. Peaks as high as 200 can be tolerated. Above these conditions, pretreatment, such as settling basins, may be required.

Operational Factors

Reliability - The recent improvements in filter technology have significantly improved filtration reliability. Control systems, improved designs, and good operating procedures have made filtration a highly reliable method of water treatment.

Collected Wastes - Table 7-7 presents a comparison of many of the filtration techniques and their applicability. Those processes having a rating under "Cake Dryness" are applicable to sludge filtering only.

Demonstration Status

Because of increased understanding, performance, and reliability filtration is becoming a standard for water treatment plants in the United States. More than 250 mixed media plants are in operation producing over one billion gallons per day of municipal water. Industries returning process water to municipal supplies should consider filtration as part of their wastewater treatment. However, none of the plants in the data base employ deep bed filtration as part of their wastewater treatment.

ION EXCHANGE

Definition of the Process

Ion exchange is a process in which ions, which are held by electrostatic forces to charged functional groups on the surface of the ion exchange resin, are exchanged for ions of similar charge in a solution in which the resin is immersed. Ion exchange is classified as a sorption process because the exchange occurs on the surface of the solid, and the exchanging ion must undergo a phase transfer from solution phase to surface phase.

TABLE 7-7

Relative Performance and Application
Characteristics of Solid/Liquid Separation Equipment

Equipment	Solids content* for which effective (weight %)	Particle-size range* (microns)	Relative Performance: Cake dryness	Relative Performance: Cake washing	Relative Performance: Filtrate clarity
Gravity filters					
Drum	0.08 to 0.8	50 to 6,000	G	-	G
Flat bed	0.05 to 5	1 to 90,000	-	G	V
Rotating screen	0.009 to 0.1	100 to 10,000	-	-	G
Sand	0.002 to 0.01	0.1 to 50	-	-	V
Table/pan	5 to 70	50 to 80,000	A-C	V	G
Travelling screen	0.009 to 0.1	100 to 10,000	-	-	G
Vibrating screen	0.1 to 1	30 to 100,000	A	A	G
Compression filter					
Automatic filter press	0.2 to 40	1 to 200	G	G	G-V
Press pan	10 to 60	1 to 200	G	G	G-V
Screw	10 to 70	1 to 200	G	-	-
Pressure filters					
Cartridge	0.002 to 0.2	0.6 to 50	A	G	G-V
Drum	0.7 to 8	5 to 200	A-G	G	G-V
Edge	0.002 to 0.1	1 to 200	A	G	G-V
Filter press	0.002 to 30	1 to 100	G	G	G-V
Leaf, horizontal	0.002 to 0.06	1 to 100	A	V	V
Leaf, vertical	0.008 to 0.04	1 to 110	A-G	A	G-V
Sand	0.002 to 0.02	0.2 to 60	-	-	G-V
Strainers	0.002 to 0.02	4 to 600	-	-	G
Tubular element	0.002 to 0.1	0.5 to 100	A	G	G-V

* Approximate values.
A = average; B = below average; G = good; V = very good.

Ion exchange is used extensively for water and wastewater treatment of a variety of industrial wastes to allow for recovery of valuable waste materials or by-products, particularly ionic forms of precious metals such as silver, gold, and uranium.

In general, a synthetic ion-exchange resin consists of a network of hydrocarbon radicals to which are attached soluble ionic functional groups. The hydrocarbon molecules are linked in a three-dimensional matrix to provide strength to the resin. The amount of crosslinking determines the internal power structure of the resin and must allow free movement of exchanging ions.

The behavior of the resin is determined by the ionic groups attached to the resin. The total number of ionic groups per unit of resin determines the exchange capacity, and the group type affects both the equilbrium and the selectivity. Cation exchangers, those resins carrying exchangeable cations, contain acid groups. The term "strongly acidic" is used in reference to a cation exchange resin containing ions from a strong acid such as H_2SO_4, and "weakly acidic" designates cation exchange resins made from a weak acid such as H_2CO_3. Anion resins containing certain ammonium compounds are referred to as "strongly basic", and those with weak base amines are referred to as "weakly basic".

The majority of cation exchangers used in water and waste treatment operations are strongly acidic, and they are able to exchange all cations from the solution. Both types of anion exchangers are employed. Strongly basic anion resins are capable of exchanging all anions, including weakly ionized material such as silicates and dissolved carbon dioxide, and weakly basic resins exchange only strongly ionized anions such as chlorides and sulfates. Characteristic selectivities of commercial resins are well-known and useful for determining which resin is most suitable for a specific application. Further, it is possible to construct a resin with high selectivity for the polluting ions involved in a particular operation.

The rate at which an exchange reaction reaches equilbrium normally is controlled by the rate of transport of the exchange ions in the solution. In a well stirred batch system or in a normal flow-through system, the exchange is generally determined by either the diffusion of ions through the pores or the resin itself.

Description of the Process

Ion exchange is used in electroplating in four ways: to reduce the salt concentrations in well or city water to be used for rinsing, to purify plating baths, to recover rinse water or chemicals, and for end-of-pipe treatment. Ion exchange should be extremely effective for end-of-pipe removal of metal ions, but the economic attractiveness is

questionable. Recovery of rinse water or chemicals is, therefore, of greatest interest. It reduces pollution by eliminating the usual wastewater stream.

Table 7-8 indicates the application of ion exchange to metal finishing operations for purification of waste rinse water. The number of "in-place regeneration" units could not be accurately determined and the number of "replacement service" units is limited because manufacturing has only recently begun. Besides the applications listed in Table 7-8, the technology for acid copper and acid zinc recovery is fully developed. In addition, zinc chloride-ammonium chloride processing is in the pilot plant stage, while phosphoric acid recovery has been demonstrated in the laboratory.

Ion exchange resins are regenerated for metal recovery in at least three different ways: by resin removal and replacement service, by conventional in-place regeneration, and by rapid cyclic operation and regeneration. Development of moving bed and fluidized bed approaches is also underway.

TABLE 7-8

APPLICATION OF ION EXCHANGE TO ELECTROPLATING FOR USED RINSE WATER PROCESSING

Application	Number in Operation (Additional Units Ordered) Replacement Service	In-Place Regeneration	Cyclic Operation
Chromic Acid Recovery	-	-	15 (5)
Nickel Sulfate Recovery	-	At least 8	4 (1)
Gold/Silver Recovery	-	At least 20	-
Phosphatizing Recovery	1	At least 1	-
Mixed Plating Wastes With Rinse Water Reuse	1	At least 1	-
Mixed Wastes, End-of-Pipe	1	At least 8	-

Replacement Service - A regeneration service replaces the spent resin with regenerated resin and regenerates the spent resin at its own facility. This service is generally performed approximately every three months. One such regeneration service designs the system, fabricates it for purchase by the user, and then services it as necessary.

In-Place Regeneration - Some establishments may find it less expensive to do their own regeneration. This regeneration will result in one or more waste streams which must either be hauled away by a contractor, treated and discharged or reused. Regeneration will be performed as required every few months. The wastes are essentially the same as those described for the following system.

Cyclic Operation - A cyclic ion exchange system as used in an electroplating plant (ID 1108) is described in the following paragraphs. The bed depth is only a few inches, and regeneration frequency is typically twice an hour. To describe the recovery of chromic acid, shown in Figure 7-16, it is convenient to divide the operating cycle into four parts: dilute rinse purification, concentrated rinse purification, regeneration, and flushing. The concentrated rinse purification step may be omitted, but chromic acid recovery capacity will be drastically reduced.

The major parts of the system are a filter, two cation resin beds, and an anion resin bed. During the dilute rinse purification step, water from the first countercurrent rinse stage (rinse No. 2 in Figure 7-16) passes through the filter, the first cation bed, and the anion bed, and then returns to the last countercurrent rinse stage (rinse No. 3). Metallic impurities such as copper, iron, and trivalent chromium are removed in the cation bed, while hexavalent chromium is retained on the anion bed, leaving pure water to return for rinsing.

The concentrated rinse purification step is essentially the same, except that the inlet water is withdrawn from a still rinse preceding the countercurrent rinse, and the purified water returns to the same still rinse. Thus, during these on-stream steps, dragged out hexavalent chromium is recovered from the rinse water and retained on the anion resin bed.

During the regeneration step, caustic is pumped through the anion bed, carrying out the hexavalent chromium as sodium dichromate. This sodium dichromate stream then passes through the second cation bed, which is in the hydrogen form. This converts the sodium chromate to chromic acid, which is concentrated by evaporation and returned to the plating bath. Meanwhile, the first cation bed is regenerated with sulfuric acid, resulting in a waste acid stream containing the metallic impurities removed earlier. The second cation bed is

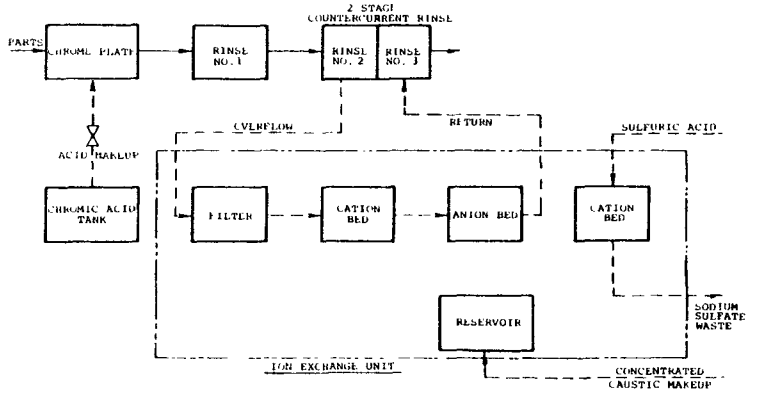

PHASE 1. DILUTE RINSE PURIFICATION

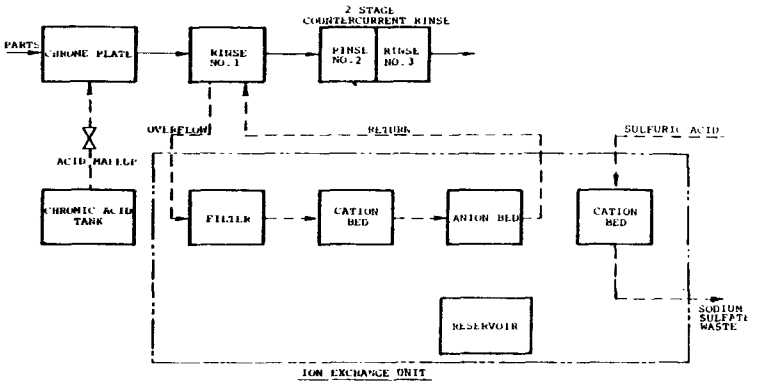

PHASE 2: CONCENTRATED RINSE PURIFICATION

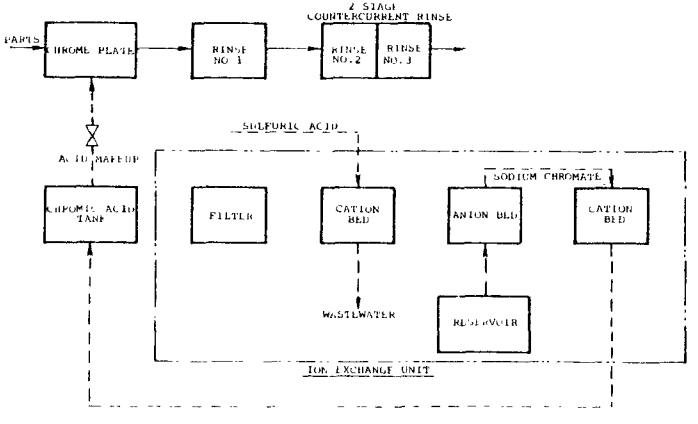

PHASE 3. REGENERATION

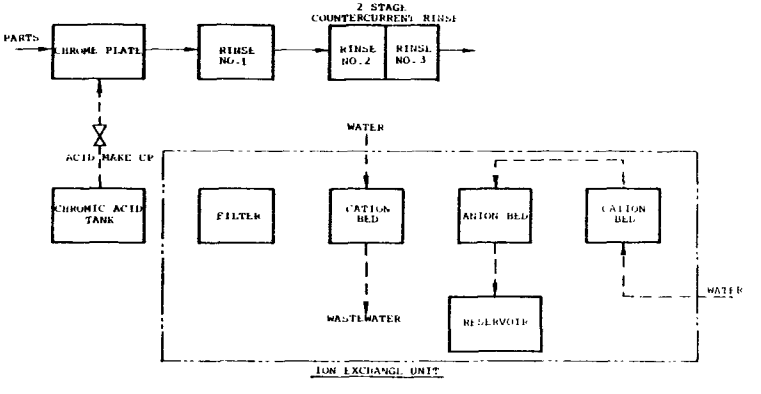

PHASE 4: FLUSHING

FIGURE 7–16 CHROMIC ACID RECOVERY BY CYCLIC OPERATION ION EXCHANGE

regenerated later, during the next rinse purification step, with sulfuric acid. This results in a stream of waste sodium sulfate.

Flushing with water completes the cycle. Water is backflushed through the second cation bed and then through the anion bed. This carries excess caustic back into the caustic supply reservoir which is then refilled with concentrated caustic. The first cation bed is flushed separately to remove sulfuric acid as a waste stream. Thus, the rinse water is purified, and chromic acid is recovered.

A similar approach is applied to nickel plating. Water from the first stage of the countercurrent rinse is pumped through a cation bed, an anion bed, and back to the final rinse stage as purified water. The cation bed recovers nickel from the rinse water. The anion bed removes organics, chlorides, bromides, and sulfates. During the following regeneration step, sulfuric acid is passed through the cation bed, and caustic is passed through the anion bed. The sulfuric acid is supplied from a dilute acid reservoir and exchanges hydrogen for nickel as it passes through the cation bed so that a mixture of sulfuric acid and nickel sulfate emerges from the bed. Meanwhile, the caustic flowing through the anion bed exchanges its hydroxyl group for sodium so that the effluent from the bed contains sodium sulfate and also any organics, chlorides, and bromides. The effluent, which contains only traces of heavy metals is neutralized and discharged. The nickel sulfate effluent resulting from regeneration of the cation bed may possibly be returned directly to the plating bath, but it is often too acidic because of the sulfuric acid in the mixture. If the bed acidity is too high, it is processed through a second anion bed which removes the sulfuric acid before being returned to the plating bath. This second anion bed must later be regenerated with caustic, resulting in additional waste sodium sulfate. The flushing step follows regeneration. Both the cation and the anion beds are flushed with water. Residual sulfuric acid in the cation bed is flushed back into a reservoir to which concentrated sulfuric acid is adddd. Residual caustic in the anion bed is flushed to waste treatment and discharged. Thus, on an overall basis, the system recovers nickel from the rinse water and returns it to the plating bath.

<u>Other Approaches</u> - Continous approaches to ion exchange are being developed to avoid the complexity or inconvenience of cyclic systems. In one of these, the resin is embedded in a fluid-transfusible, polyester belt. The continuous belt passes through a compartmented tank with adsorption, wash, and regeneration sections. Wastewater flows in one end of the baffled adsorption section and out the other, with the resin belt running through it in a generally countercurrent direction. The belt is then spray washed before entering the regeneration section, where it is sprayed with an appropriate liquid regenerant as it passes through successive compartments. The

serpentine path of the belt gives it maximum exposure to the wastewater and regenerant.

The system can be used either for recovery of plating chemicals from rinse water or for removal of impurities from plating solutions. In one instance of the latter application, the following performance is claimed for a hard chromium plating bath:

	Concentration, mg/l	
Impurity	Inlet	Outlet
Copper	100	0
Iron	3000	100
Trivalent Chromium	5500	0

Fluidized bed ion exchange systems are under development in both the United States and Canada, with the Canadian system targeted for electroplating applications. However, information on this system was not available for inclusion in this document.

Advantages and Limitations

Ion exchange systems are compact, relatively inexpensive, and can often be installed with little or no production interruption. However, treatment of wastes by ion exchange is complicated by the presence of materials or conditions which may clog, attack, or foul resins. Most current synthetic resins resist serious chemical or thermal attack. High concentrations of oxidizing agents, such as nitric acid, can attack these resins at vulnerable cross-links. Regarding temperature stability, most resins are stable to 100 degrees C or higher.

The selectivity characteristics of exchangers can often be exploited by employing specially prepared resins. Even the separation of similar ions has been achieved, notably the separation of the rare earth metals by taking advantage of their dissimilar complexing characteristics in solution. The major disadvantages of a high degree of selectivity in an exchange reaction are the tight bonds formed and poor regeneration characteristics.

Finally in a fixed bed packed column, excessive settleable or suspended solids will cause a rapid and excessive pressure loss, significantly reducing operating efficiency.

Performance

Ion exchange is highly efficient at recovering plating chemicals. A chromic acid recovery efficiency of 99.5 percent has been demonstrated by the cyclic operation system. Company 32619 claims this has reduced their chromic acid purchases by 75 percent (an annual saving of more than $3,800 in chromic acid) and company 61001 claims a 90 percent reduction (an annual saving of more than $20,000 in chromic acid). At Company 61001, hexavalent chromium in the discharge regenerant from the chromic acid recovery ion exchange system was nondetectable.

With regard to purification of the rinse water, the following data have been reported for the "replacement service" system:

Contaminant	Raw Wastewater Concentration, mg/l	Treated Wastewater Concentration, mg/l
Aluminum	5.60	0.24
Cadmium	1.05	0.00
Chromium	7.60	0.06
Copper	4.45	0.09
Iron	3.70	0.10
Nickel	6.20	0.00
Silver	1.50	0.00
Tin	0.50	0.00
Cyanide	0.80	0.20
Sulfate	21.0	2.0
Phosphate	3.75	0.80

Demonstration Status

Eleven of 196 plants in the electroplating data base employ ion exchange as part of or all of their waste treatment system (ID's 5050, 1108, 11065, 12065, 2017, 2021, 31050, 33009, 40004, 40061, and 61001).

EVAPORATION

Definition of The Process

Evaporation is a concentration process. Water is evaporated from a solution, increasing the concentration of solute in the remaining solution. If the resulting water vapor is condensed back to liquid water, the evaporation-condensation process is called distillation. However, to be consistent with industry terminology, evaporation is used in this report to describe both processes.

Both atmospheric and vacuum evaporation are used in the electroplating industry. Atmospheric evaporation could be accomplished simply by boiling the liquid. However, to lower the evaporation temperature, the heated liquid is sprayed on an evaporation surface, and air is blown over this surface and then released to the atmosphere. Thus, evaporation occurs by humidification of the air stream, similar to a drying process.

For vacuum evaporation, the evaporation pressure is lowered to cause the liquid to boil at reduced temperature. All of the water vapor is condensed and, to maintain the vacuum condition, noncondensible gases (air in particular) are removed by a vacuum pump. Vacuum evaporation may be either single or double effect. In double effect evaporation, two evaporators are used, and the water vapor from the first evaporator (which may be heated by steam) is used to supply heat to the second evaporator, condensing as it does. Roughly equal quantities of waste water are evaporated in each evaporator; thus, the double effect system evaporates twice the water that a single effect system evaporates, at nearly the same cost in energy but with added capital cost and complexity. The double effect technique is thermodynamically possible because the second evaporator is maintained at lower pressure (higher vacuum) and, therefore, lower evaporation temperature. Another means of increasing energy efficiency is vapor recompression (thermal or mechanical), which enables heat to be transferred from the condensing water vapor to the evaporating waste water. Vacuum evaporating equipment may be classified as submerged tube or climbing film.

In the most commonly used submerged tube evaporator, shown in Figure 7-17B, the heating and condensing coils are contained in a single vessel to reduce capital cost. The vacuum in the vessel is maintained

by an eductor-type pump, which creates the required vacuum by the flow of the condenser cooling water through a venturi. Wastewater accumulates in the bottom of the vessel, and it is evaporated by means of submerged steam coils. The resulting water vapor condenses as it contacts the condensing coils in the top of the vessel. The condensate then drips off the condensing coils into a collection trough that carries it out of the vessel. Concentrate is removed from the bottom of the vessel.

The major elements of the climbing film evaporator are the evaporator, the separator, the condenser, and the vacuum pump. As shown in Figure 7-17C, wastewater is "drawn" into the system by the vacuum so that a constant liquid level is maintained in the separator. Liquid enters the steam-jacketed evaporator tubes, and part of it evaporates so that a mixture of vapor and liquid enters the separator. The design of the separator is such that the liquid is continuously circulated from the separator to the evaporator. The vapor entering the separator flows out through a mesh entrainment separator to the condenser, where it is condensed as it flows down through the condenser tubes. The condensate, along with any entrained air, is pumped out of the bottom of the condenser by a liquid ring vacuum pump. Thus, the liquid seal provided by the condensate keeps the vacuum in the system from being broken.

Advantages and Limitations

Some advantages of the evaporation process are:

1. It permits recovery of a wide variety of plating and other process chemicals.

2. The water recovered from the evaporation process is of high purity. This process can be used to convert waste effluent to pure or process water where other water supplies are inadequate or nonexistent.

3. The evaporation process may be applicable for removal and/or concentration of waste effluent which cannot be accomplished by any other means.

Some limitations or disadvantages of the evaporation process are:

1. In general, the evaporation process consumes relatively large amounts of energy for the evaporation of water. However, the recovery of waste heat from many industrial processes (e.g., diesel generators, incinerators, boilers and furnaces) should be considered as a source of this heat for a totally integrated evaporation system.

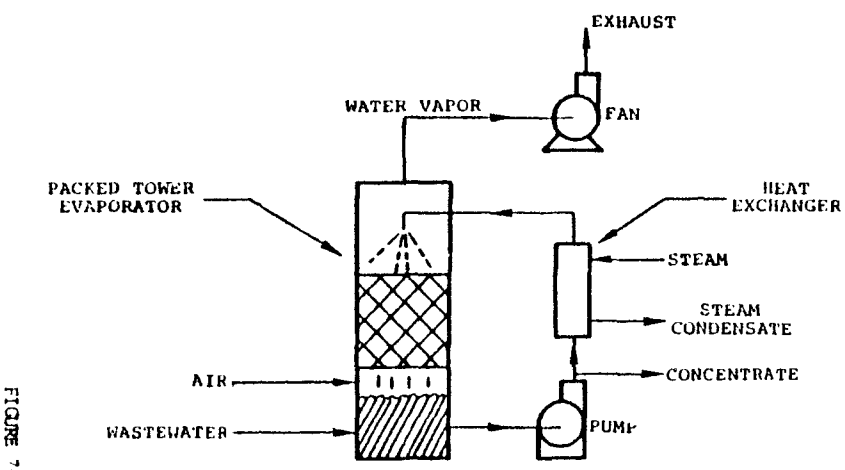

ATMOSPHERIC EVAPORATOR

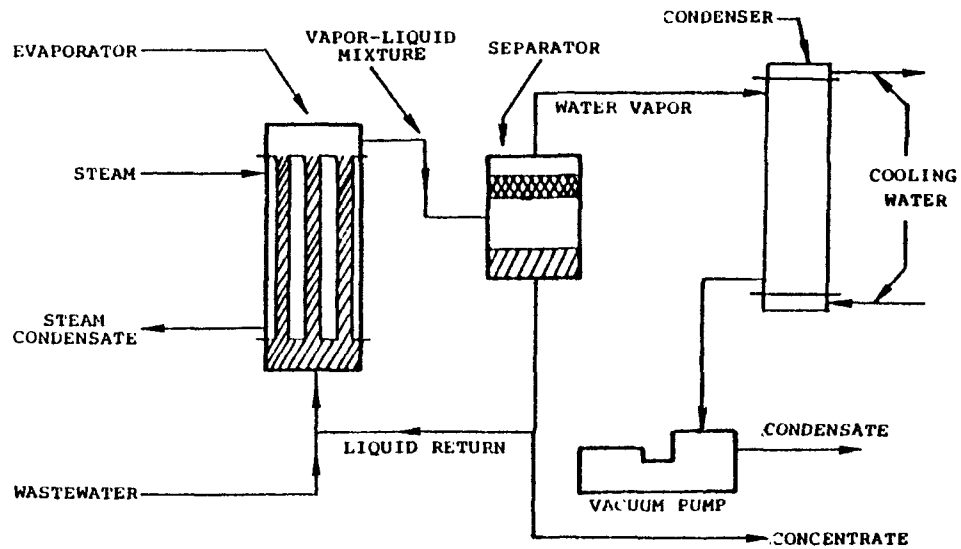

CLIMBING FILM EVAPORATOR

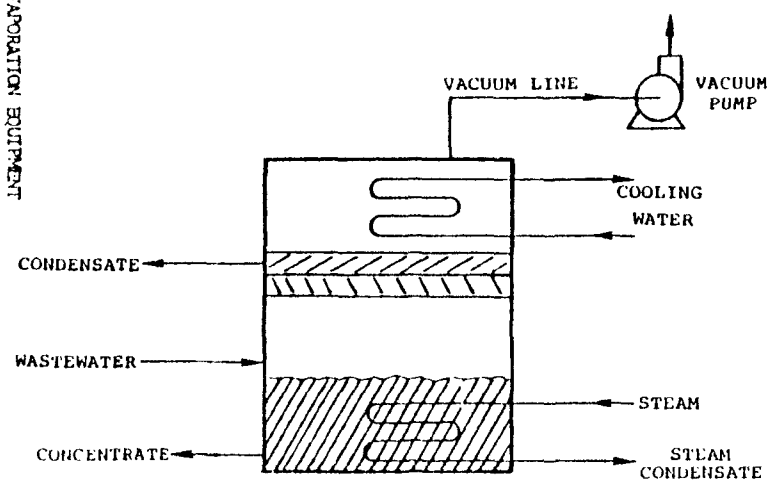

SUBMERGED TUBE EVAPORATOR

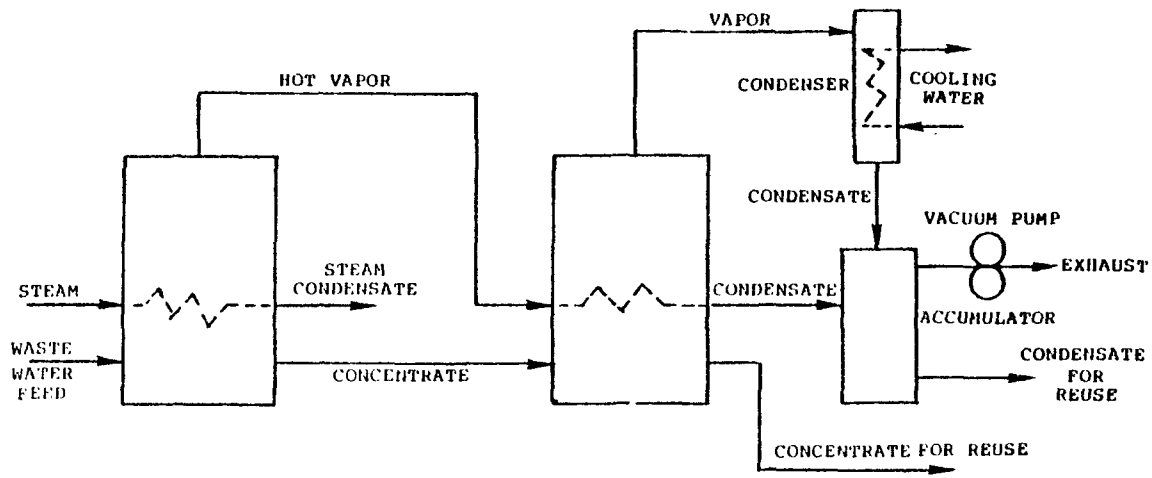

DOUBLE-EFFECT EVAPORATOR

FIGURE 7-17 TYPES OF EVAPORATION EQUIPMENT

2. For some applications, pretreatment may be required to remove solids and/or bacteria which tend to cause fouling in the condenser or evaporator.

3. The buildup of scale on the evaporator plates reduces the heat transfer efficiency and may present a maintenance problem or increase operating cost. However, it has been demonstrated that fouling on the heat transfer surfaces can be avoided or minimized for certain dissolved solids by maintaining a seed slurry which provides preferential sites for precipitate deposition. In addition, low temperature differences in the evaporator will eliminate nucleate boiling and supersaturation effects.

4. Steam distillable impurities in the process stream are carried over with the product water and must be handled by pre or post treatment if they cannot be tolerated.

Application to Electroplating

Evaporators are used primarily to concentrate and recover plating solutions, as shown in Figure 7-18. Many of these evaporators also recover water for rinsing. However, there are at least two electroplating installations (establishments 1108 and 30069) where the evaporation system is designed to evaporate end-of-pipe wastewater to near dryness.

Table 7-9 summarizes the application of evaporation to electroplating. The tabulated values are based mainly on a survey of evaporator manufacturers. The first flash evaporation unit was installed in 1949, and the data base for this project confirms that it is the most common type.

There is no fundamental limitation on the applicability of evaporation. There are, however, certain practical limitations for most types. For example, climbing film evaporation is used for acid copper plating solutions but not for cyanide copper because the materials of construction in current use are appropriate only for acidic conditions. However, both atmospheric and submerged tube evaporators are used for cyanide copper, and there is no reason why climbing film evaporation could not be used after a suitable change in construction materials.

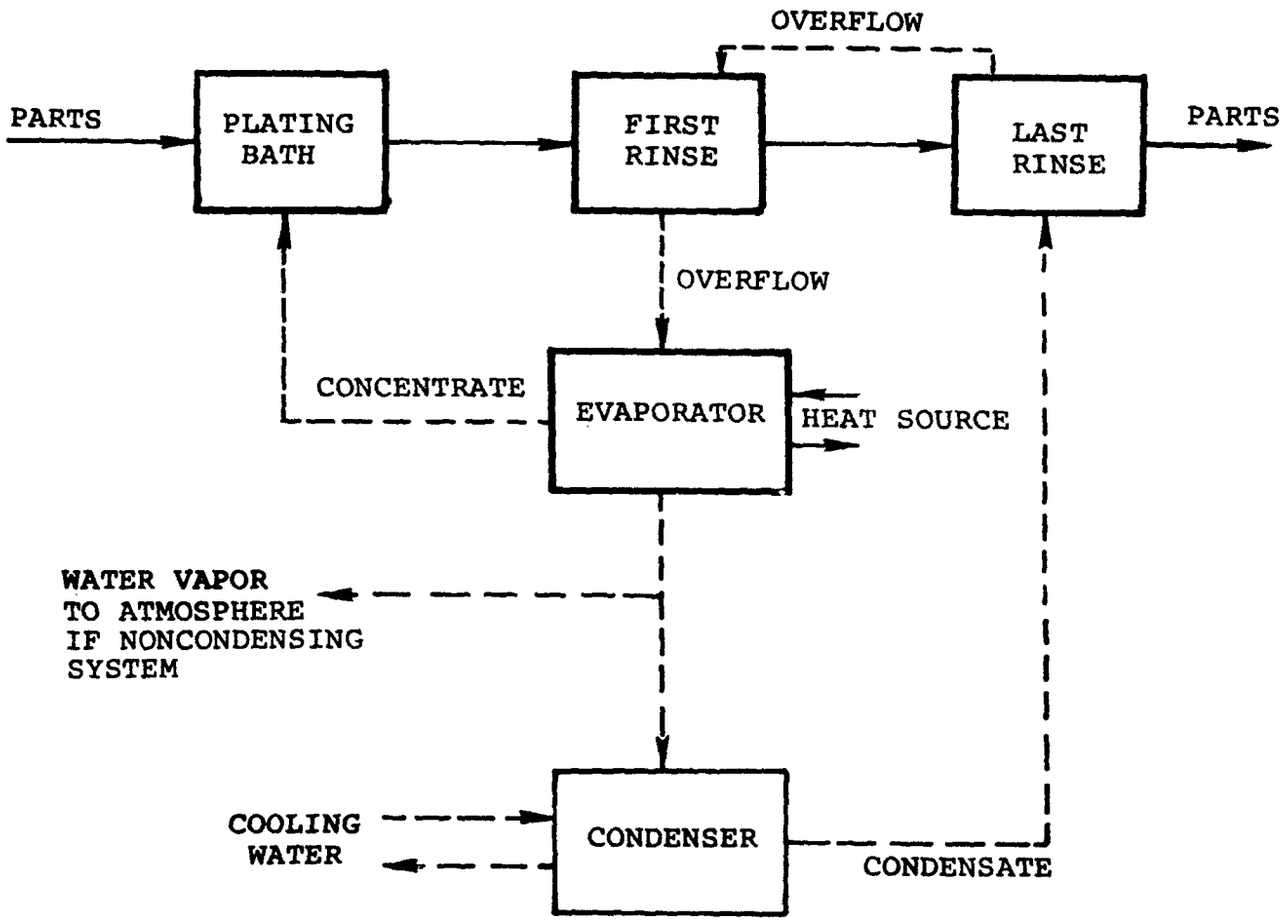

FIGURE 7–18 APPLICATION OF EVAPORATION TO METAL FINISHING

TABLE 7-9

APPLICATION OF EVAPORATION
TO THE ELECTROPLATING POINT SOURCE CATEGORY

	Number in Operation (Additional Units Ordered)				
Application	Atmospheric	Submerged Tube	Climbing Film	Flash	Wiped Film
Chromium Plating	21 (3)	14	8	7-*	-
Nickel Plating	6 (1)	9	-	-	-
Copper Plating	2 (2)	5	1	-	-
Cadmium Plating	-	4	-	56*	-
Zinc Plating	1	6	-	-	-
Silver Plating	-	7	-	-	-
Brass or Bronze Plating	-	-	-	-	-
Other Cyanide Plating	-	3	-	-	-
Chromic Acid Etching	- (1)	-	4 (1)	-	-
End-of-Pipe	-	-	-	-	2
Other, Unknown	-	1 (1)	-	14*	-

*Estimated by manufacturer

Performance

In theory, evaporation should yield a concentrate and a deionized condensate. Actually, carry-over has resulted in condensate metal concentrations as high as 10 mg/l, although the usual level is less than 3 mg/l, pure enough for most final rinses. The condensate may also contain organic brighteners and antifoaming agents. These can be removed with an activated carbon bed, if necessary. Samples from plant ID 61001 showed 1,900 mg/l zinc in the feed, 4,570 mg/l in the concentrate, and 0.4 mg/l in the condensate. Plant ID 33065 had 416 mg/l copper in the feed and 21,800 mg/l in the concentrate. Chromium analysis for the plant indicated 5,060 mg/l in the feed and 27,500 mg/l in the concentrate. Evaporators are available in a range of capacities, typically from 15 to 75 gph. Units may be used in parallel arrangements for higher rates.

Demonstration Status

Evaporation is used for treatment in 12 plants in the 196 plant data base for this study (Reference Table 7-10).

REVERSE OSMOSIS

Definition of the Process

Osmosis is the passage, through a semipermeable membrane, of a liquid from a dilute to a more concentrated solution. The transfer from one side of the membrane to the other continues until the head (pressure) is large enough to prevent any further transfer of water to the more concentrated solution.

In reverse osmosis (RO), pressure is applied to the more concentrated solution side of the semipermeable membrane causing the permeate to diffuse through the membrane in the direction opposite to the osmotic pressure. The concentrated solution of dissolved solids left behind can be further treated or returned for reprocessing.

Process Equipment

In commercially available RO Systems, three basic modules are used: the tubular configuration, the spiral-wound, and the hollow fiber. Each, however, works on the same RO principle, the only difference is how the various membrane structures are mechanically designed and supported to take the operating pressures.

TABLE 7-10

ELECTROPLATING PLANTS THAT EMPLOY EVAPORATION

301	2024
304	20064
637	20069
6050	20073
1108	33065
1903	38050

TABLE 7-11

APPLICATION OF REVERSE OSMOSIS
IN THE ELECTROPLATING POINT SOURCE CATEGORY

Application	Number in Operation (Additional Units Ordered)	
	Spiral Wound	Hollow Fiber
Acid Nickel	68	2
Acid Zinc	3	-
Acid Copper	3	-
Palladium Chloride-Ammonium Chloride	1	-
Mixed Plating Wastes	5	-

Hollow fiber modules consist of polyamide fibers, each having approximately 0.0076 cm (3 mils) OD with about 0.0043 cm (1.7 mil) ID. A typical RO module will contain several hundred thousand of these fibers in a long tube. The fibers are wrapped around a flow screen which is then rolled into a spiral. Each end of the roll is potted in epoxy. The module consists of lengths of the fiber membrane bent into a U - shape with their ends supported by the epoxy. Feed water, under 28.2 atm (400 psi), is brought into the center of the module through a porous distributor tube where it flows through the membrane to the inside of the fibers and from there to the end where it is collected. The concentrate is returned to the process or to further treatment.

Tubular membrane systems use a cellulose acetate membrane-lined porous tube. In a typical tube system, a length of 2.54 cm (1 in) diameter tube is wound on a support spool and enclosed within a plastic shroud. Feed water is driven into the tube at approximately 55.4 atm (800 psi). Permeate which passes through the walls of the coiled tube is collected and drained off for use. Another type of system module employs this principle in a straight tube within a housing.

Spiral-wound flat sheet membranes consist of a porous backing material sandwiched between two membranes and glued along three edges. The fourth edge of the "bag" is bonded to a product collection tube. A spacer screen is placed on top of the bag, and the whole unit is rolled around the central product collection tube. The spiraled unit is then placed inside a pipe capable of supporting the feed water pressure. In operation, the product water under pressure will permeate the membrane and travel through the backing material to the central product collection tube. The concentrate, containing dissolved solids, is then drained, returned to the process, or fed to further treatment facilities.

Advantages claimed for the hollow fiber and spiral-wound membranes over the tubular-wound system include an ability to load a large surface area of membrane into a relatively small volume. On the other hand, with regard to fouling tendencies, the tubular system is less susceptible to fouling than the others because of its larger flow channel. Although all three systems theoretically can be chemically regenerated, it can be very difficult to remove deposits from the hollow fiber and spiral-wound membrane types. One manufacturer claims that their helical tubular module can be physically wiped clean by passing a soft porous polyurethane plug under pressure through the module.

In selecting reverse osmosis devices for use in treatment of wastewater, the effect of temperature on any reverse osmosis device is significant. As water temperature increases, visocosity of water decreases, and the semipermeable membrane passes more water, approximately 3 percent per degree centrigrade. Therefore, the

capacity is a straight line function of temperature. However, pollutant permeability is also increased so that water quality remains essentially constant. Membrane systems are usually rated at 20 degrees C (68 degrees F), and wastewater temperature should be considered in sizing a RO unit.

Advantages and Limitations

Some advantages of reverse osmosis for handling process effluent are:

1. Ability to concentrate dilute solutions for recovery of salts and chemicals.

2. Ability to sufficiently purify water for reuse.

3. Ability to operate under low power requirements (no latent heat of vaporization or fusion is required for effecting separations; the main energy requirement is for a high pressure pump).

4. Operation at ambient temperature, i.e., about 15.5 to 32.2 degrees C (60 to 90 degrees F).

5. Relatively small floor space requirement for compact high capacity units.

Some limitations or disadvantages of the reverse osmosis process for treatment of process effluents are:

1. Limited temperature range for satisfactory operation. (For cellulose acetate systems, the preferred limits are 18.3 to 29.4 degrees C (65 to 85 degrees F); higher temperature will increase the rate of membrane hydrolysis and reduce system life, while lower temperature will result in decreased fluxes with no damage to the membrane).

2. Inability to handle certain solutions (strong oxidizing agents, solvents, and other organic compounds can cause dissolution of the membrane).

3. Poor rejection of some compounds (such as borates and organics of low molecular weight exhibit poor rejection).

4. Fouling of membranes by slightly soluble components in solution.

5. Fouling of membranes by feed waters with high levels of suspended solids (such feed must be amenable to solids separation before treatment by reverse osmosis).

6. Inability to treat highly concentrated solutions (some concentrated solutions may have initial osmotic pressures which are so high that they either exceed available operation pressures or are uneconomical to treat).

7. Normally requires pretreatment to achieve adequate life.

Application to Electroplating

Reverse osmosis is used to close the loop as shown in Figure 7-19A. Countercurrent rinsing is used to reduce the quantity of rinse water. Overflow from the first rinse tank, contaminated with drag-out from the plating bath, is pumped to the reverse osmosis unit. The reverse osmosis unit separates the influent rinse water into two streams, one containing a much higher concentration of dragged out plating chemicals (the concentrate) and the other containing a much lower concentration (the permeate). The concentrate is returned to the plating bath, replacing evaporated water and dragged out chemicals. The permeate goes to the last rinse tank, providing water for the rinsing operation. Rinse water flows from the last rinse tank to the first rinse tank, either directly or through intermediate rinsing stages.

Reverse osmosis has limited concentrating ability and, therefore, the system shown in Figure 7-19B may be required to reduce the concentrate volume. In this approach, the reverse osmosis concentrate is further concentrated by means of vacuum evaporation. The vapor may be vented through a scrubber, condensed and returned to the last rinse tank, or condensed, treated, and discharged. An alternative variation is to increase plating bath evaporation rate, making room for the reverse osmosis concentrate.

The cellulose acetate units have been applied mainly to nickel plating, and their success in that application is proven. However, the acetate membrane is limited to a relatively narrow pH range. The polyamide has a broader pH tolerance, but it has been applied mainly to mixed plating water and has, for the most part, failed due to plugging in that application. Thus, use of reverse osmosis in other applications is certainly possible but not thoroughly demonstrated.

Table 7-11 indicates the application of reverse osmosis to electroplating. The spiral wound membranes in current use are cellulose acetate, which degrades under alkaline conditions. Hollow fiber reverse osmosis may be used under the alkaline conditions in cyanide plating baths, but consistent performance has not yet been demonstrated. A totally new membrane now being tested for application to cyanide plating baths shows great promise. Designated NS-100, the membrane consists of polyethyleneimine crosslinked with tolylene-2, 4-diisocyanate on a polysulfone support. This membrane is claimed to

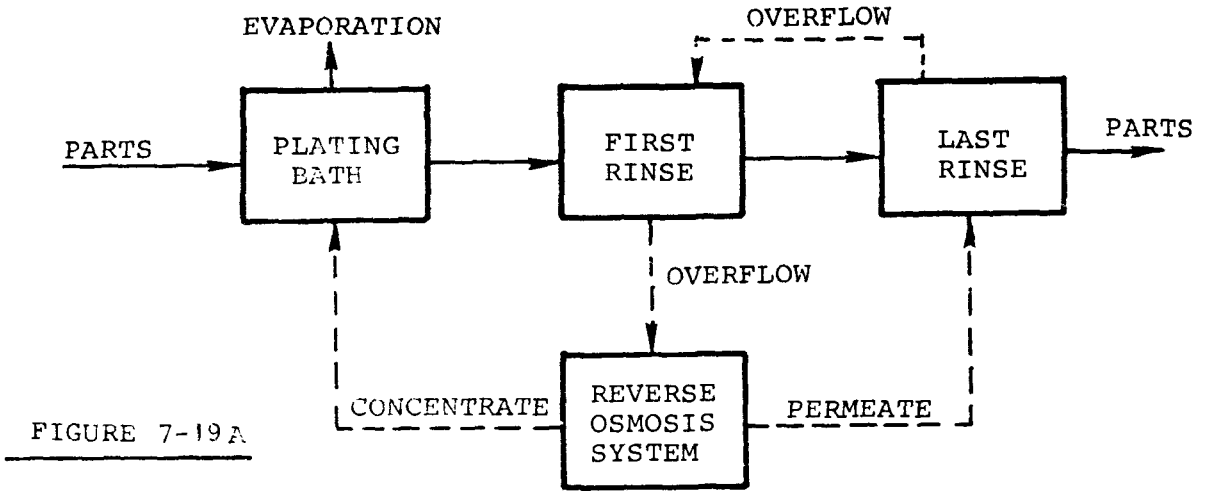

FIGURE 7-19 A

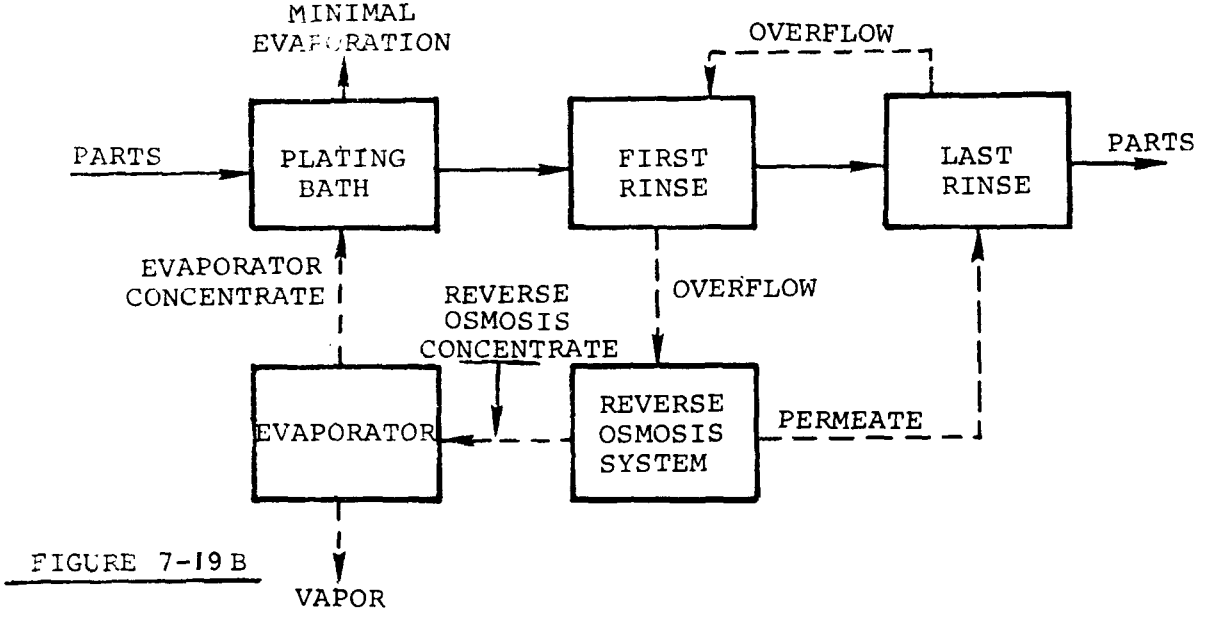

FIGURE 7-19 B

FIGURE 7-19 APPLICATION OF REVERSE OSMOSIS ALONE AND WITH SUPPLEMENTAL EVAPORATION

exhibit excellent stability and excellent reverse osmosis performance for feed solutions with the pH ranging from less than 1 to 13.

The overwhelming application of reverse osmosis is for the recovery of nickel plating solutions. It appears to apply equally to other acid metal baths and to mixed plating wastes if the pH is not too high. Misapplication of RO can cause many failures and complete dissatisfaction; however, proper application preceded by sufficient testing has demonstrated the usefulness of RO under specific conditions.

Performance

In considering reverse osmosis, the electroplater needs to estimate how much of the feed water will emerge as concentrate and how pure the permeate will be. These values may be determined from the "recovery" and "percent ejection", which are two of the parameters customarily used to describe reverse osmosis performance.

The recovery is the permeate flow rate expressed as a percentage of the feed flow rate. Thus, if F is feed flow rate, P is permeate flow rate, and R is recovery,

$$R = (P/F) \times 100$$

and the concentrate flow, C, is

$$C = F-P = F - (FR/100)$$

Recoveries of 90 percent are usually attained, and 95 percent is generally practical. Higher recoveries can often be achieved by staging two reverse osmosis units.

Percent rejection is defined as

$$r = (CAV-CP) / (CAV/100)$$

where CAV may be approximated by (CF + CC) /2, and CF is the concentration of the constituent in question in the feed, CC is the concentration in the concentrate, and CP is the concentration in the effluent permeate. Substitution and rearrangement yields the concentration of the constituent in the permeate.

$$CP = (CF + CC)/2 - r\ (CF + CC)/200$$

The concentration in the concentrate is estimated by making a system materials balance assuming that all of the constituent ends up in the concentrate.

This procedure may be illustrated by considering a Watts nickel line with a two-stage countercurrent rinse. The rinsing rate is 150 gpd, and the concentration in the first rinse is 1,200 mg/l. Table 7-12 shows typical rejection values for reverse osmosis. Assuming a recovery of 90 percent and a rejection for nickel from Table 7-12 of 99 percent, the foregoing equations can be solved. The result is a concentrate rate of

$$C = F - FR/100 = 150 - (150)(90)/100 = 15 \text{ gpd}$$

The concentration of nickel in the concentrate is then approximately

$$C = 1{,}200\ (150/15) = 12{,}000 \text{ mg/l}$$

The concentration of nickel in the permeate is then approximately

$$CP = (CF + CC)/2 - r(CF + CC)/200 = (1{,}200 + 12{,}000)/2 - 99\ (1{,}200 + 12{,}000)/200 = 66 \text{ mg/l}$$

Permeate rate will be 150 - 15 = 135 gpd, and 15 gpd makeup rinse water will, therefore, be required. The concentrate is strong enough to return to the plating bath, the permeate is clean enough for rinsing in an intermediate plating operation, and the evaporation rate of 15 gpd is typical. For comparison, analysis of samples taken during the survey

TABLE 7-12

TYPICAL MEMBRANE PERFORMANCE

Ion	Percent Rejection	Maximum Concentrate Concentration of the Indicated Ion, Percent
Aluminum	99+	5-10
Ammonium	88-95	3-4
Cadmium	96-98	8-10
Calcium	96-98	*
Copper	98-99	8-10
Iron	98-99	*
Magnesium	96-98	*
Manganese	98-99	*
Mercury	96-98	-
Nickel	98-99	10-12
Potassium	94-96	3-4
Silver	94-96	*
Sodium	94-96	3-4
Zinc	98-99	10-12
Bicarbonate	95-96	5-8
Borate	35-70	-
Chloride	94-95	3-4
Chromate	90-98	8-12
Cyanide	90-95	4-12
Ferrocyanide	99+	8-14
Fluoride	94-96	3-4
Nitrate	93-96	3-4
Phosphate	99+	10-14
Sulfate	99+	8-12
Sulfite	98-99	8-12
Thiosulfate	99+	10-14

*Depends on other ions present

visit to Company 33065 showed 20,700 mg/l of nickel in the concentrate and 81 mg/l in the permeate.

The preceding calculation approach determines the effect of integrating a reverse osmosis unit into a plating line.

Demonstration Status

Seven electroplating plants in the data base of 196 plants employ reversis (ID's 808, 1122, 1203, 1302, 3305, 33065, and 38050).

ULTRAFILTRATION

Definition of the Process

Ultrafiltration (UF) is a process using semipermeable polymetric membranes to separate molecular or colloidal materials dissolved or suspended in a liquid phase when the liquid is under pressure. The membrane of an ultrafilter forms a molecular screen which separates molecular particles based on their differences in size, shape, and chemical structure. The membrane permits passage of solvents and lower molecular weight solutes while barring dissolved or dispersed molecules above a predetermined size. At present, an ultrafilter is capable of separating materials with molecular weights in the range of 5,000 to 100,000.

Process Equipment

In an ultrafiltration process, the feed solution is pumped through a tubular membrane unit. Water and some low molecular weight materials pass through the membrane under the applied pressure. Emulsified oil droplets and suspended particles are retained, concentrated, and removed continuously. In contrast to ordinary filtration, retained materials are washed off the membrane filter rather than held by the filter.

The pore structure of the membrane acts as a filter, passing small particles, such as salts, while blocking larger emulsified and suspended matter. The pores of ultrafiltration membranes are much smaller than the blocked particles. Therefore, these particles cannot clog the membrane structure.

Once a membrane is chosen that provides maximum attainable removal of the desired particles, the next most important design criterion is the membrane capacity. Here the term flux is used. Flux is the volume of water passed through the membrane area per unit time. The standard units are cu m/day/sq m (gpd/sq ft). Both membrane equipment and operating costs increase with the membrane area required. It is, therefore, desirable to maximize flux.

Membrane flux is normally dependent on operating pressure, temperature, flux velocity, solids concentration (both total dissolved solids and total suspended solids), membrane permeability, membrane thickness, and fluid viscosity. Membrane flux is also affected by the hydrophilic nature of the solution being processed. With a fixed geometry, membrane flux will increase as the fluid velocity is increased in the system. This increase in fluid velocity will require greater pumping capacity and more horsepower. Less membrane area is, therefore, required per unit of effluent to be treated with higher fluid velocities so the membrane replacement and initial capital costs decrease. Opposing these cost decreases is the increase in power and its attendant cost.

Advantages and Limitations

Ultrafiltration is sometimes an attractive alternative to chemical treatment because of the following major advantages:

1. Lower capital equipment, installation, and operating costs.

2. Insensitivity to the chemical nature of influent wastes.

3. Very high oil removal efficiency, independent of influent oil content

4. No chemical additions required.

5. No oily sludge generated.

6. Little, if any, pretreatment required.

7. Concentrated waste can be incinerated and may be self sustaining.

8. Very compact; utilizes small amount of floor space.

9. Provides a positive barrier beteeen oil and effluent. This eliminates the possibility of oil discharge which might occur due to operator error.

Some limitations or disadvantages of ultrafiltration for treatment of process effluents are:

1. Limited temperature range (18 to 30 degrees C) for satisfactory operation. Membrane life is decreased with higher temperatures, but flux increases at elevated temperatures. Therefore, surface area requirements are a function of temperature and become a tradeoff between initial costs and replacement costs for the membrane.

2. Inability to handle certain solutions. Strong oxidizing agents, solvents, and other organic compounds can cause dissolution of the membrane.

3. Poor rejection of some compounds.

4. Fouling of membranes by slightly soluble components in solution.

Application to Electroplating

There is an increasing acceptance of ultrafiltration as a proven technique for the removal of oily or paint contaminated wastes from the process effluent stream. This permits reuse of both the permeate and concentrate. Ultrafiltration of the effluent obtained from electrocoating (electropainting) which has developed over the past three years, provides an excellent example of this process. Most of the automotive manufacturers and many other U.S. companies use electropainting for priming purposes. In this application, the ultrafiltration unit splits the electropainting rinse water circulating through it into a permeate stream and paint concentrate stream. The permeate is reused for rinsing, and the concentrate is returned to the electropainting bath. Application to electropainting has allowed many plants to increase solids to 15 percent from the previous 8-10 percent levels.

Bleeding a small amount of the ultrafiltrate, which contains no suspended solids and generally two or three percent of organic solids, to the waste system enables ionic contaminants to be recovered from the paint itself. Situations where tanks of 150,000 to 190,000 liters (40,000 to 50,000 gallons) of paint were periodically dumped because of contamination have now been eliminated by using ultrafiltration, thus reducing effluent problems arising from this dumping process.

The economics of the recovery of high priced paint have allowed many industrial ultrafiltration plants to be paid off in as little as six to nine months, and this has fostered rapid acceptance of ultrafiltration within the industry.

Performance

The most common applications of ultrafiltration demonstrate the following performance:

Application	Percent Removal Demonstrated
Removal of Paint Solids	100%
Removal of Cutting Oils and	

Emulsified Oil Coolants	99%
Removal of Particulate Matter	100%
Removal of Detergents	99%
Removal of Inks and Dyes	100%
Removal of Total Solids	95%

pH and other conditions affect attainment of the removal percentages shown.

The permeate or effluent from the ultrafiltration unit is normally of a quality that can be reused in industrial applications or discharged directly. The concentrate from the ultrafiltration unit can be disposed of readily by incineration or by contract hauling. If incineration is employed, additional fuel is not required because the concentrated emulsion will support combustion. If contract hauling is used, the cost is lowered because the waste volume is small, and a usable product is available to the contractor.

Demonstration Status

Two plants in the 196 plant electroplating data base employed ultrafiltration (ID's 907 and 3334).

MEMBRANE FILTRATION

Definition of the Process

The membrane filtration end-of-pipe treatment system is a combination of a special chemical destruction technique and a special membrane filter for effluent clarification. Thus, chromium reduction, cyanide oxidation, and pH adjustment for precipitation are still required. The first unique feature of this system is a proprietary chemical added to the pH adjustment tank every few months. This chemical is not consumed, but causes the metal hydroxide precipitate to be nongelatinous, easily dewatered, and highly stable. The second feature of the system is the membrane filter modules through which the pH-adjusted water is pumped. These modules are similar to ultrafiltration modules, but the membrane pores are larger. The water that permeates these membranes is nearly free of the precipitate.

Process Equipment

Chromium reduction, cyanide oxidation, and pH adjustment equipment are standard. Additional equipment consists of a pump, and a set of filter modules. As shown in Figure 7-20, the contents of the tank are

continuously recirculated through the filter module at 15 psig. Each of these modules contains 13 tubular membranes. Purified water permeates these membranes and is continuously withdrawn from the system for discharge.

Thus, a wastewater-precipitate mixture is continuously added to the system, and purified water is continuously withdrawn, resulting in a steady increase in solids concentration in the recirculating wastewater. When the solids content reaches about 15 percent, the sludge valve at the discharge of the recirculating pump is opened, and the contents of the recirculating tank are discharged for direct landfill or dewatering and landfilling.

Advantages and Limitations

The four major advantages of the membrane filtration system are:

1. Installation can utilize most of a conventional end-of-pipe system that is already in place.

2. Complexed metals can be removed with high efficiency.

3. The sludge is highly stable in alkaline conditions.

4. Removal efficiencies are excellent, even with widely varying pollutant input rates.

The only disadvantage is that the cost of a membrane filter is approximately 20 percent greater than a clarifier, which is the only component of a conventional system that the membrane filter replaces.

Application to Electroplating

The membrane filtration system may be used in a new plant or it may be used in an existing plant in place of the clarifier to reduce pollutant discharge.

Performance

Flux for the membrane is 500 to 800 gallons per square foot per day. The manufacturer claims the following effluent concentrations are achievable regardless of influent concentration:

Wastewater Constituent	Effluent Concentration, mg/l
Aluminum	0.5
Chromium, hexavalent	0.03
Chromium, trivalent	0.02

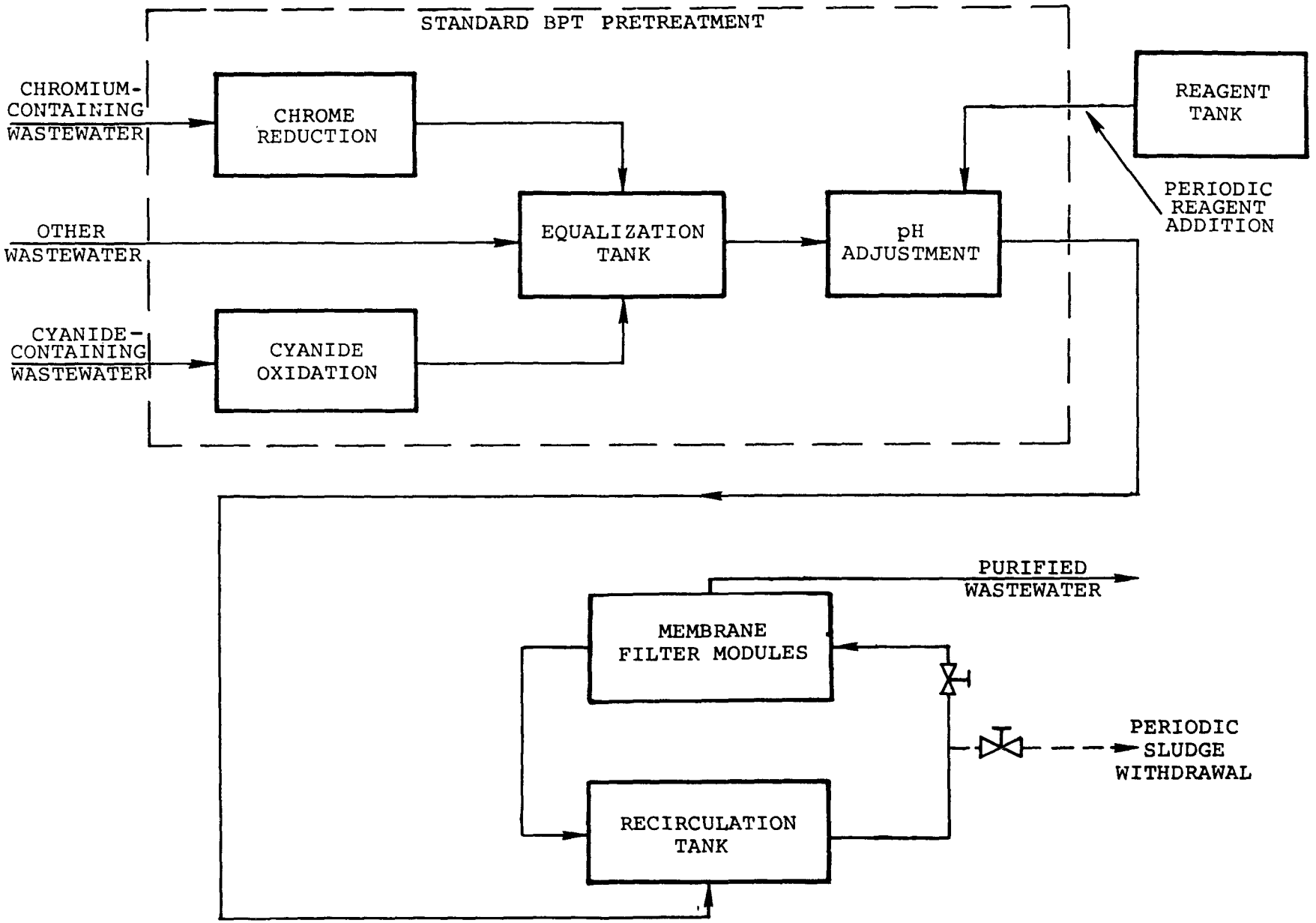

FIGURE 7–20 APPLICATION OF MEMBRANE FILTRATION TO METAL FINISHING WASTEWATER

Copper	0.1
Iron	0.1
Lead	0.05
Cyanide	0.02
Nickel	0.1
Zinc	0.1

These claims are largely substantiated by the following analysis of composite samples taken during this project at Company ID 19066:

Wastewater Constituent	Concentration, mg/l Recirculation Tank Influent	Membrane Filter Effluent
Cyanide, Total	Less than 0.005	Less than 0.005
Phosphorus		0.158
Cadmium	0.007	Less than 0.005
Chromium, hexavalent	0.46	0.010
Chromium, total	4.13	0.018
Copper	18.8	0.043
Fluorides	22.0	22.0
Nickel	9.56	0.017
Lead	0.652	Less than 0.01
Tin	0.333	0.200
Zinc	2.09	0.046
Total Suspended Solids	632.0	Less than 0.01

In addition, tests carried out by one electroless plater show that the system is also effective in the presence of strong chelating agents such as EDTA, but continuous addition of the chemical reagent is required. In particular, laboratory bench scale and pilot studies have been conducted on several waste streams.

a. Tin and lead waste containing thiourea copper complexes were tested on a pilot unit for over 200 hours with no flux deterioration and with tin, lead and copper all less than 0.1 mg/l in the process water.

b. Cupro-ammonia complex rinse from alkaline etching was treated in the pilot unit for 400 hours with no flux deterioration and with copper in the effluent less than 0.1 mg/l.

   Based on this laboratory pilot study, a 1 gpm pilot test was run in a printed circuit board manufacturing facility. Over a 200 hour period, the flux was always in excess of 1.1 gpm. The copper was consistently below 0.5 mg/l and usually at 0.1 mg/l, even with a varying concentration of copper in the feed.

c. Preliminary runs with electroless copper rinse waters have yielded product water in the range of 0.1 mg/l.

Another aspect of performance are leaching characteristics of the sludge. The state of South Carolina approved the sludge for landfill provided that an alkaline condition be maintained. This decision was based on tests carried out by the state in which metals were extracted from the sludge with nitric acid at various conditions of pH. Even at the slightly acid pH of 6.5, leachate from a sludge containing 2,600 mg/l of copper and 250 mg/l of zinc contained only 0.9 mg/l of copper and 0.1 mg/l of zinc.

Demonstrated Status

Only one plant (ID 19066) employed membrane filtration in the 196 plant electroplating data base for this study. However, there are a total of 15 fully operational units, 6 of these are treating chelated metal wastewaters with reportedly good performance.

ELECTROCHEMICAL RECOVERY

Two processes for electrochemical recovery (electrolytic recovery and electrodialysis) are discussed here. A conventional version and an advanced version of each process is reviewed. Following the Definition of Process Subsection, the four versions (conventional and advanced electrolytic recovery and electrodialysis) are covered individually.

Definition of the Process

Electrolytic recovery is a process in which there is electrochemical reduction of metal ions at the cathode where these ions are reduced to elemental metal. At the same time, there is evolution of oxygen at the anode. Electrolytic recovery is used primarily to remove metal ions from solutions.

Electrodialysis is a process in which dissolved colloidal species are exchanged between two liquids through selective semipermeable membranes. An electromotive force causes separation of the species according to their charge, and the semipermeable membranes allow passage of certain charged species while rejecting passage of oppositely charged species. Electrodialysis is used primarily to remove and concentrate dilute solutions of salt and other chemicals from a waste stream, thereby providing purified water.

Conventional Electrolytic Recovery

Conventional Electrolytic Recovery Equipment - Equipment consists of a drag-out recovery tank located in the plating line and an electrolytic

recovery tank and recirculation pump, remote from the plating line. A typical electrolytic recovery tank uses stainless steel cathodes of approximately 15 cm. width upon which the recovered metal is deposited. After the coating is sufficiently thick (0.6 cm.), the metal deposited can be peeled off and returned to the refiner, or the metal plated stainless steel can be used for anodes in the plating bath.

To get high plating efficiencies, it is desirable that the solution be reasonably well agitated in the electrolytic cell where the cathode sheets are in use. The electrolytic recovery tank is designed to produce high flow rates in a narrow channel.

To avoid buildup of harmful impurities in the recirculated solution, approximately 20 percent of it should be dumped to waste treatment each week.

Application of Conventional Electrolytic Recovery - Electrolytic recovery is used to recover copper, tin, silver, and other metals from plating and etching bath dragout. Because the electrolytic process maintains a low concentration of metal in the drag-out recovery process relative to that in the plating bath, metal drag-over into the succeeding rinse tank is minimized. This, in turn, minimizes the load on the waste treatment system and the eventual pollutant discharge rate.

Performance of Conventional Electrolytic Recovery - Performance is best illustrated by the actual examples tabulated below:

Parameter	Tin Plating	Silver Plating
Plating Bath Concentration, g/l	81	82
Drag-out Tank Concentration, g/l	1.2	0.2
Drag-out Rate, gph	1.2	0.8
Recovery Efficiency, %	97-99	99.8
Cathode Area, sq. ft.	45	35
Current Density, amp/sq. ft.	5-10	3-5
Current Efficiency, %	70	25-50
Current, amp	240	175

Advanced Electrolytic Recovery

Advanced Electrolytic Recovery Equipment - The extended surface electrolysis recovery system (ESE) discussed here recovers metal better at low concentrations than at high concentrations, whereas the conventional electrolytic recovery system is only good for recovery of metal at high concentrations. An extended surface electrolytic recovery unit removes contaminant metals by electroplating them onto a specially constructed flow-through electrode.

The electrolytic processing technique involves reduction of the metal ions at the cathode to form the elemental metal, with evolution of oxygen at the anode.

Other cathodic reactions, such as the reduction of ions to produce hydrogen gas, may also occur depending on the chemical composition of the streams being treated.

The ESE spiral cell is of sandwich construction containing a fixed "fluffy" cathode, a porous insulating separator, an anode of screenlike material and another insulating separator. The anode and cathode material may vary with the particular effluent stream to be treated. Typically, cathode material is a fibrous woven stainless steel mesh with a filament size of 2-5 mils. This sandwich structure cathode, separator material, and anode are rolled into a spiral and inserted into a pipe. This type of cell construction results in a very open structure with a void volume of 93% to 95%, which provides a low resistance to fluid flow.

A number of cells can be stacked as modules so that a large fraction of contaminant metals can be recovered from an effluent. The solution to be treated is pumped in at the top of the module and flows down through the cells where the metals are plated out on the cathode. Figure 7-21 shows that, as a copper-containing solution flows through the cell stack, copper ions are attached to the cathode and deposited as copper metal, hydroxyl ions are attracted to the anode, and hydrogen and oxygen gas are given off. The following reactions take place at the cathode:

$$Cu^{++} + 2e^- = Cu$$

and at the anode:

$$2(OH^-) = H_2O + 1/2\ O_2$$

These reactions take place continuously as the fluid is pumped through the various cells in the cell stack.

<u>Application of Advanced Electrolytic Recovery</u> - Extended surface electrolysis cells are still in the pilot stage and will be used commercially to plate out copper, lead, mercury, silver and gold. This system should provide a very efficient means of removal because of its low mass transfer requirements, larger electrode surface area and, because of the construction of the electrodes, increased electrical efficiency. This unit can be used in conjunction with conventional electrodialysis or other forms of treatment.

<u>Performance of Advanced Electrolytic Recovery</u> - Pollutants recovered by the ESE modules are independent of concentration levels. Under

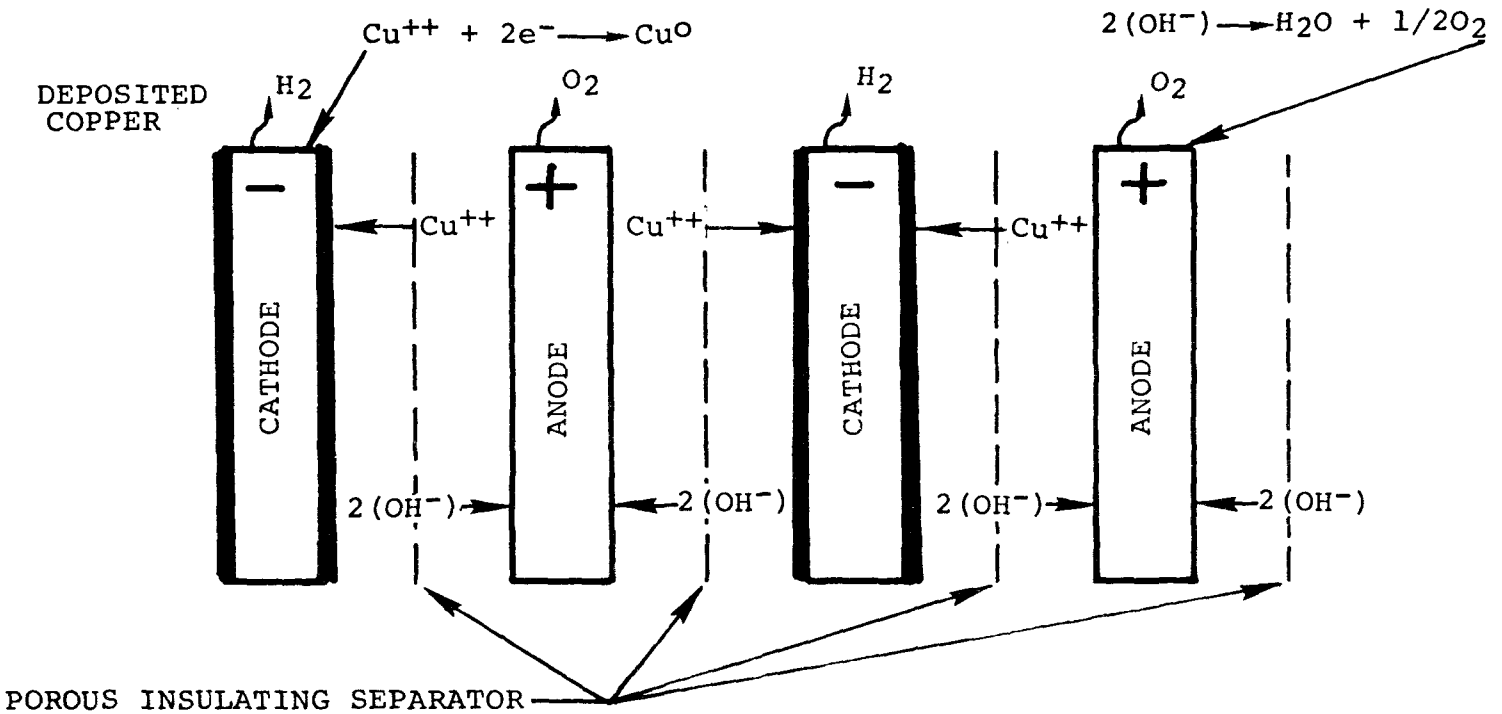

FIGURE 7–21 EXTENDED SURFACE ELECTROLYSIS CELLS

mass-transfer-limiting conditions, this device will operate as efficiently at one mg/l as at 1000 mg/l. The effluent concentration decreases exponentially with the length of the module and its available cathode area. Complexing of metals in solution is a problem in some applications.

The following table shows the level of copper concentrations in waste achievable, for three influent levels. The final concentrations for all three cases are less than 1 mg/l.

Solution Concentration, mg/l
At Various Points in a Cell Stack

Untreated	After 1 Cell	After 2 Cells	After 3 Cells	After 4 Cells
20.0	8.2	3.4	1.3	0.6
45.5	15.5	5.4	2.1	0.9
15.5	5.6	2.8	1.7	0.7

With the addition of one more cell in all three cases, the cell effluent level would be below 0.05 mg/l. The water can then be recirculated back to the rinse tanks.

Flow to the ESE unit must be interrupted once a day for approximately one hour so that the accumulated metals in the cell can be stripped out by circulating an acidic cleaner through the cell. A schematic diagram, Figure 7-22, shows how the cell is placed in a plating line. The graph in Figure 7-23 compares the effect of electrical efficiency in metals reduction for ESE and planar electrodes.

As indicated by the preceding table, a cell stack is at least 90 percent efficient in removal of metals from solution. A 200 l/min waste stream containing 50 mg/l copper requiring a 100:1 concentration reduction could be treated in a 20 cm diameter ESE unit having 48 inches of active electrode length. The same waste stream treated by conventional means would require a 120 cm diameter clarifier over 5 meters high. The electrical energy needed to treat this stream in an ESE cell would approximate the energy expended to drive the rake on a clarifier.

Cost of Advanced Electrolytic Recovery - The installation and investment of the ESE unit is determined by three factors; the flow rate of the stream to be treated, the reduction in metal concentrations to be obtained and the degree to which the metal is complexed in the solution. The operating costs of the unit depend on cost of electricity to operate the cells and pumps and on manpower for operation and maintenance. Comparing ESE with ion exchange on waste such as acidified copper sulfate, performance of ESE indicates it may be preferred for low concentrations (around 10 mg/l). However, for

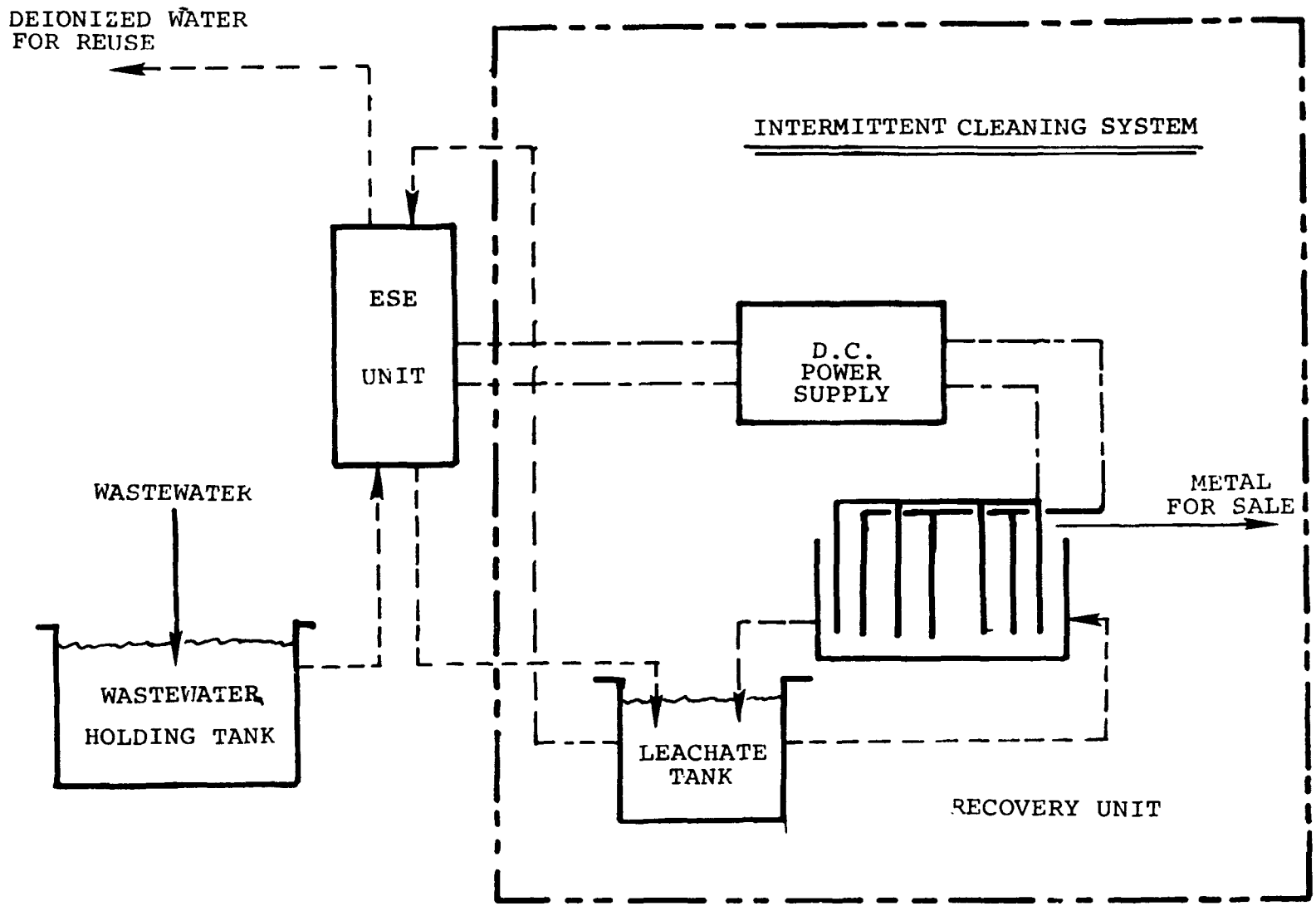

FIGURE 7–22 APPLICATION OF EXTENDED SURFACE ELECTROLYSIS

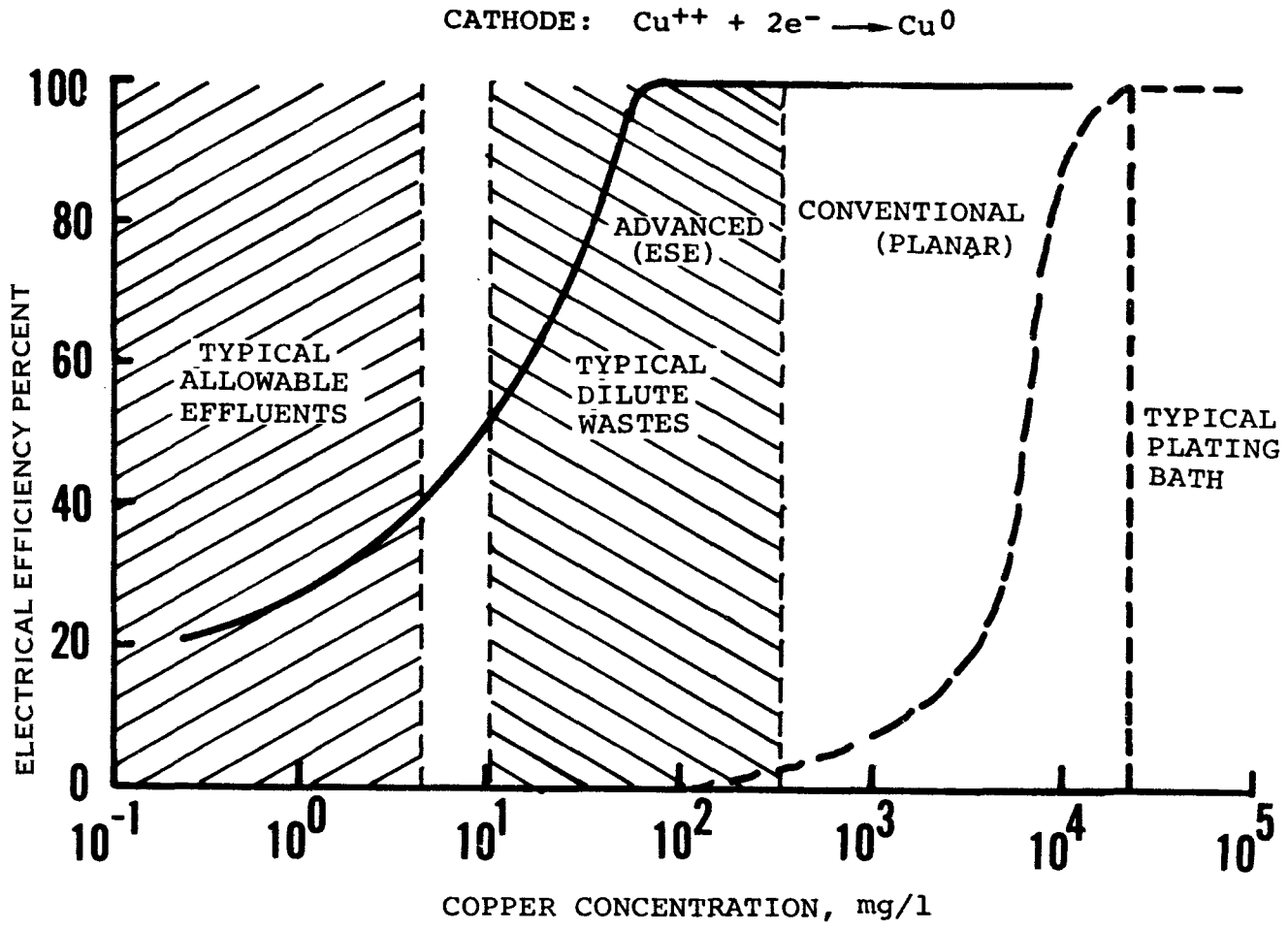

FIGURE 7–23 EFFECT OF CONCENTRATION ON ELECTRICAL EFFICIENCY IN METALS REDUCTION.

high concentrations (100 to 1000 mg/l), ion exchange appears to be the least costly technology.

Conventional Electrodialysis

Conventional Electrodialysis Process Equipment - Conventional electrodialysis systems consist of an anode and a cathode separated by an anion permeable membrane near the anode and a cation permeable membrane near the cathode. This combination forms anode chamber, cathode chamber, and center chamber. Upon application of an electric charge, anions pass from the center chamber to the anode chamber and cations pass from the center chamber to the cathode chamber. This decreases concentration of salt in the center chamber.

Figure 7-24 shows the application of a simple electrodialysis cell to separate potassium sulfate solution (K_2SO_4) into its components. Practical electrodialysis installations contain from ten to hundreds of compartments between one pair of electrodes. The application of an electric charge draws the cations to the cathode and anions to the anode. Industrial wastewater containing metallic salts enters the center cell, and the charge takes the positive ions to the cathode and negative ions to the anode. The result is a significant reduction in salt concentration in the center cell with an increase in solution concentrations in the adjacent cells. Thus, the water from the center of each of three adjacent cells is purified and metal ions are concentrated in the cathode cell, with sulfates, chlorides, etc., concentrated in the anode cell. At the outlet end of the cell stack, streams are drawn off from the individual cells either as the purified water or as concentrate for recovery or for further treatment.

Figure 7-25 illustrates the operation of a seven chamber conventional electrodialysis cell. In large electrodialysis installations, two or more stacks are linked in series. The dilute effluent from the first stage is passed through an identical second stage, and so forth, with the effluent from the final stage reaching the desired concentration.

Application of Conventional Electrodialysis - Electrodialysis has been shown to be an effective method for concentrating rinse waters to a high percentage of bath strength. Nickel, copper, cyanide, chromic acid, iron and zinc can be removed from plating wastes by electrodialysis. The natural evaporation taking place in a plating bath will often be sufficient to allow electrodialysis to be used to close the loop without the addition of an evaporator. Electrodialysis is used to treat spent chromic acid, copper, cyanide and other solutions. Chromic acid solution containing trivalent chromium, iron, zinc, copper, etc., enters the anode compartment of the electrodialysis cell, where the application of an electrical potential causes the copper, zinc, and trivalent chromium to pass through the cation permeable membrane to the catholyte solution. At the same

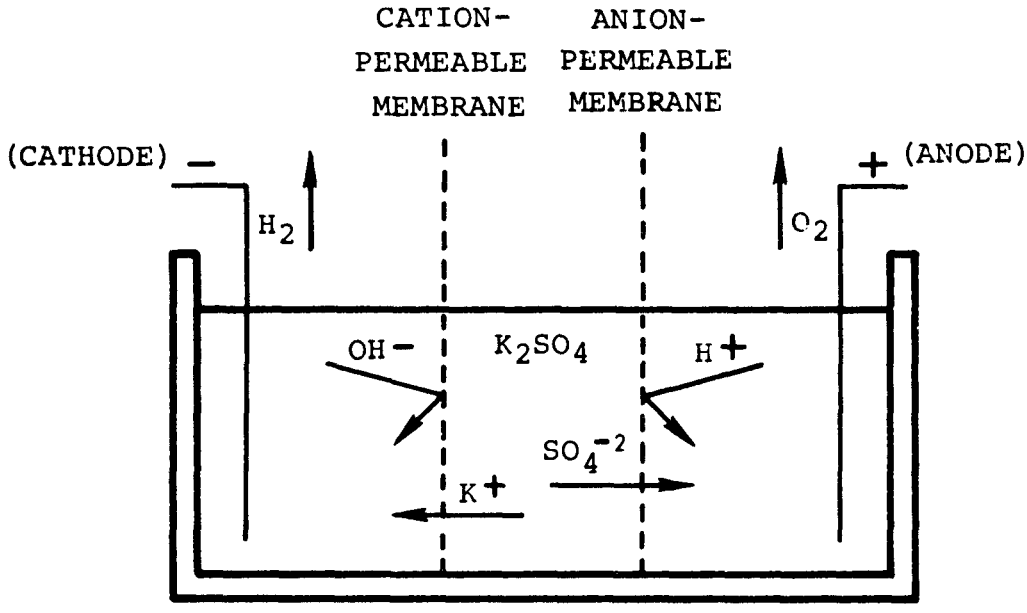

FIGURE 7–24 SIMPLE ELECTRODIALYSIS CELL

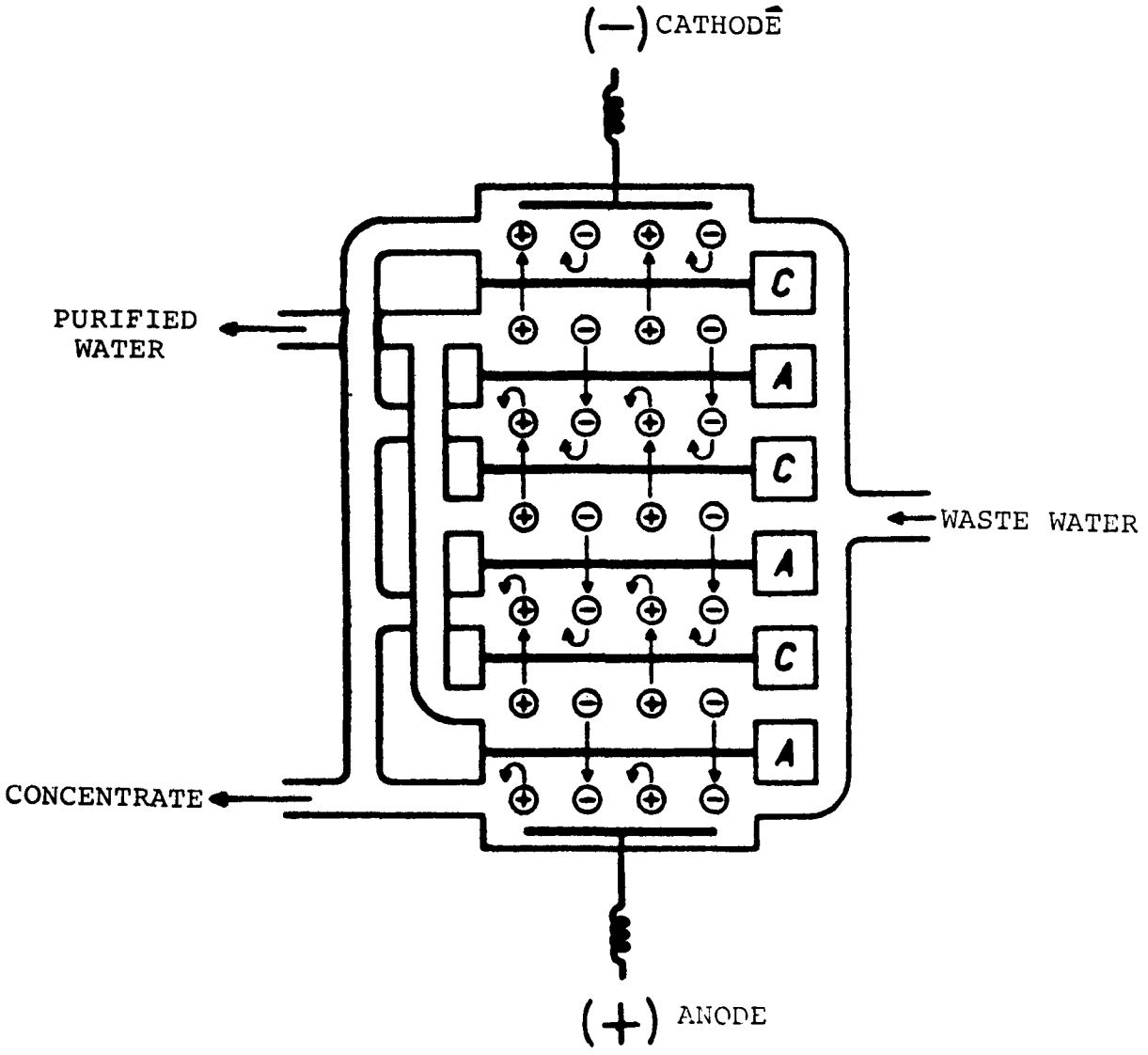

FIGURE 7–25
MECHANISM OF THE ELECTRODIALYTIC PROCESS.

time, some of the trivalent chromium passes through the anion-permeable membrane to the anode solution where it is oxidized to hexavalent chromium at the anode. The result is a decreased concentration of metal ions in the solution between the cation-permeable membrane and the anion-permeable membrane.

Conventional electrodialysis is being used by plant ID 20064 as a means of recovering various metals. Electrodialysis can be combined with an existing treatment system for recovery of metals, or it can be used with other treatment to effect recirculation of rinse water. The possibilities that exist for electrodialysis are many, and with recent developments in membrane materials and cathode design and increased knowledge of their applications, it may become a major form of treatment for metals.

Performance of Conventional Electrodialysis - Little information is available on performance for treatment of chromic acid; however, information is available on copper cyanide performance. Copper cyanide rinse water is treated in an electrodialysis unit for return of the concentrated chemicals to the plating bath. The copper cyanide chemicals in the rinse water can be concentrated to slightly more than 70 percent of the bath strength. For most copper cyanide plating, this concentration may be sufficient to permit the direct return of all chemicals to the processing operation. Figure 7-26 shows an electrodialysis recovery system.

Advanced Electrodialysis

Advanced Electrodialysis Equipment - This particular electrodialysis system is used to regenerate chromic acid etchant by oxidizing trivalent chromium to hexavalent chromium. Its design uses a circular, permeable anode, separated from the cathode by a perfluorosulfonic membrane. The anode material is a specially designed lead alloy. The cathode is made from Hastelloy C tubing, which is a nickel alloy. The cathode is located in the center of the circular, permeable anode and has a catholyte (10 percent sulfuric acid) which is circulating through it and surrounds the cathode. This solution is used as a transfer solution. Figure 7-27 shows the physical construction of this circular electrodialysis cell.

The etchant is pumped in at the bottom of the unit through the anode so that it remains in the chamber between the anode and the perfluorosulfonic membrane. No transfer of solution takes place except for a small percentage of copper. Chromium in the trivalent form is contained in the etchant and, when a current is passed through this etchant solution, electrons are stripped from the trivalent chromium causing oxidation of the trivalent chromium to hexavalent chromium. The newly stripped electrons migrate through the perfluorosulfonic membrane into the catholyte solution. Converted

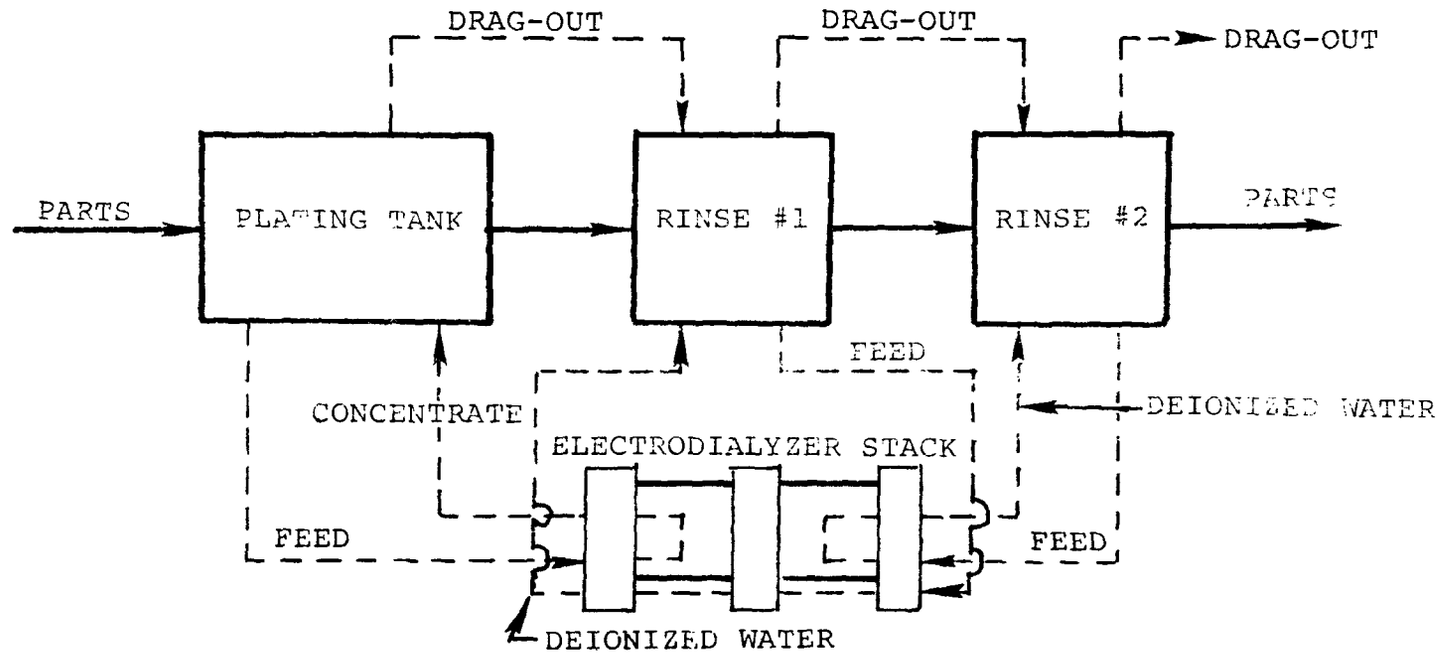

FIGURE 7–26 ELECTRODIALYSIS RECOVERY SYSTEM

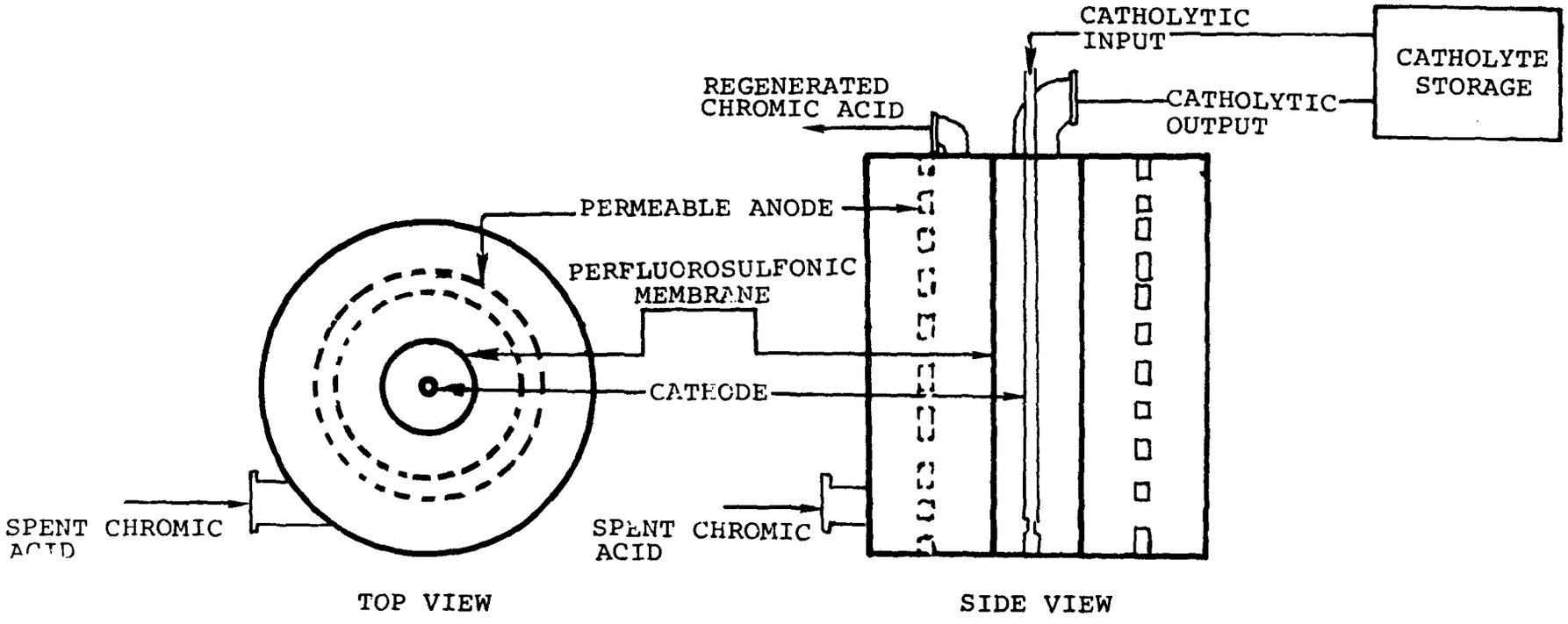

FIGURE 7-27 ELECTROLYTIC RECOVERY

hexavalent chromium is pumped back into the chromic acid etch tank for reuse, while at the same time the catholytic solution is being recirculated. The reaction which occurs at the anode is as follows:

$$Cr^{+3} + 12\ H_2O - 3e^- = CrO_4^{-2} + 8H_3O^{+1} + 6e^-$$

This reaction is continually taking place as both the etchant and the catholyte are circulated through the cell.

Application of Advanced Electrodialysis - Electrodialysis of chromium, oxidizing trivalent chromium to hexavalent chromium, is not widely practiced as yet. It is, however, a very efficient method for regenerating spent chromic acid etchant and it is used at one company visited (ID 20064). This electrodialysis cell closes the loop on chromium so that there is no need to reduce hexavalent chromium. The only application, current or predicted, for this electrodialysis cell system is the oxidation of chromium wastes.

Performance of Advanced Electrodialysis - The electrical efficiency of the unit varies with the concentration of both hexavalent chromium and trivalent chromium. The electrochemical efficiency of the unit is generally between 50 and 90 percent, depending on the concentrations. This corresponds to an energy consumption of 8 to 16 kwh/kg of chromic acid from reduced chromium. The metal removal efficiency of the electrodialysis unit is 90 percent for 8 mg/l of trivalent chromium and 95 percent for 12 mg/l.

SLUDGE DEWATERING

Several of the wastewater treatment concepts described in this section, such as clarification and sedimentation, produce sludge. Disposal of the sludge is usually accomplished by incineration, contractor removal, or by landfilling. Disposal is usually facilitated if the sludge is concentrated or dewatered, since incineration energy requirements are lower, and bulk handling problems are minimized if landfill or haulaway methods are employed.

Sludge is usually dewatered in one of the following ways; thickening, gravity settling, centrifugation, vacuum filtration, sludge bed drying, and pressure filtration.

GRAVITY SLUDGE THICKENING

Definition of the Process

Gravity sludge thickening is the concentrating of solids in a solid-liquid system by gravitational force. As a waste treatment technique, gravity thickening is employed to concentrate sludge prior to dewatering.

Description of the Process

In the gravity thickening process, dilute sludge is fed from a primary settling tank to a thickening tank. Rakes stir the sludge gently to densify the sludge and to push the concentrated sludge to a central collection well. The supernatant is returned to the primary settling tank. The thickened sludge that collects on the bottom of the tank is pumped to dewatering equipment or hauled away as required. Figure 7-28 shows the design and construction of a gravity thickener.

Advantages and Limitations

The principle advantage of a gravity sludge thickening process is that it facilitates further sludge processing. Other advantages are high reliability and minimum maintenance requirements.

Limitations of the sludge thickening process are its sensitivity to the flow rate through the thickener and the sludge removal rate. These rates must be low enough not to disturb the thickened sludge.

Specific Performance

Primary sludges from sedimentation units of one to two percent solids concentration can usually be gravity thickened to six to ten percent; chemical sludges can be thickened to four to six percent.

Operational Factors

Reliability - Reliability is high assuming proper design and operation. A gravity thickener is designed on the basis of square feet per pound of solids per day, in which the required surface area is related to the solids entering and leaving the unit. Thickener area requirements are also expressed in terms of mass loading, grams of solids per square meter per day (pounds per square foot per day).

Maintainability - Twice a year, a thickener must be shut down for lubrication of the drive mechanisms. Occasionally, water must be pumped back through the system in order to clear sludge pipes.

Collected Wastes - Thickened sludge from a gravity thickening process will usually require dewatering prior to disposal, incineration, or drying. The clear effluent may be recirculated in part, or it may be subjected to further treatment prior to discharge.

Demonstration Status

Gravity sludge thickeners are used throughout industry to reduce water content to a level where the sludge may be efficiently handled.

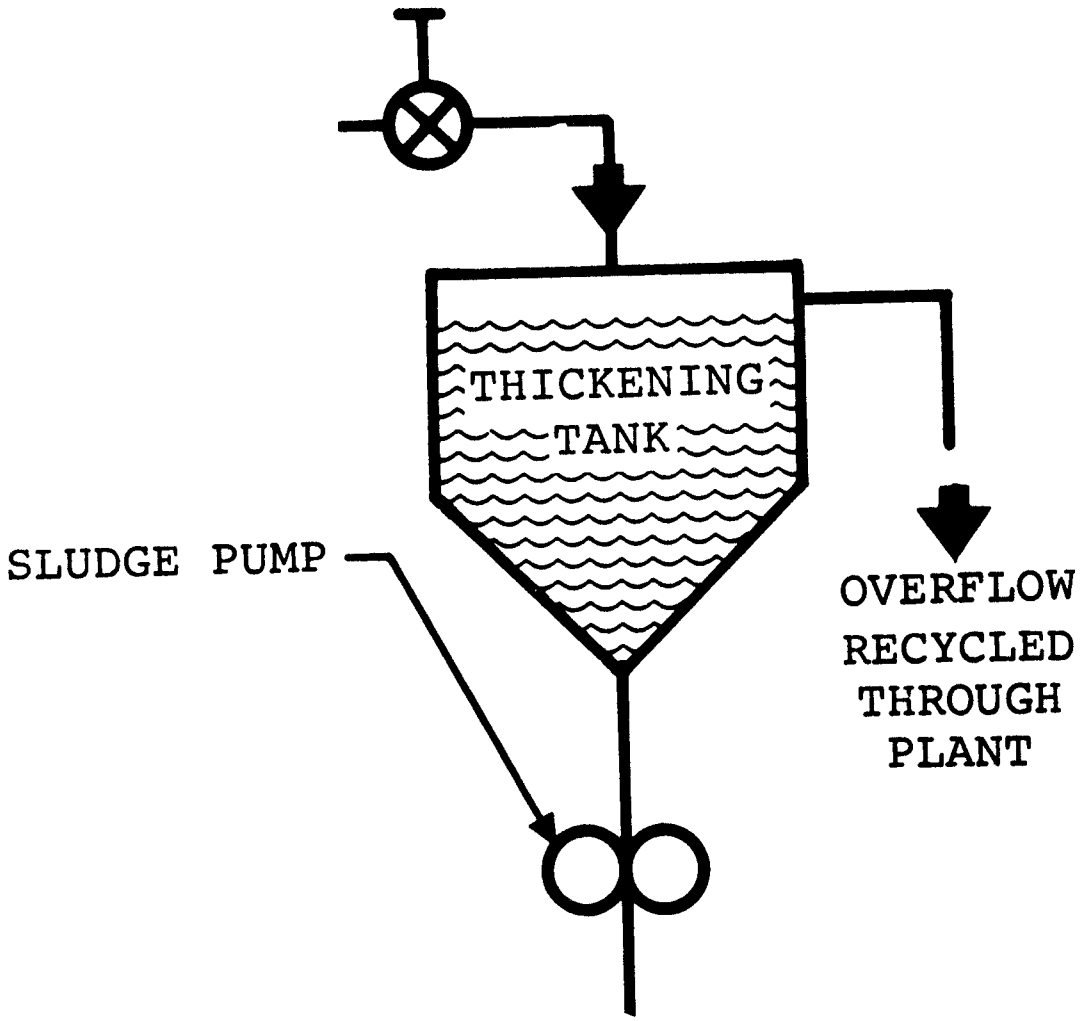

FIGURE 7-28
MECHANICAL GRAVITY THICKENING

Further dewatering is usually practiced to minimize costs to approved landfill areas.

FILTER PRESS

Definition of the Process

Pressure filtration is a sludge dewatering process which occurs by pumping the liquid through a filter which is impenetrable to the solid phase. The positive pressure exerted by the feed pump(s) or other mechanical means provides the pressure differential and is the principle driving force.

As a waste treatment procedure, pressure filtration is used to dewater sludge. A typical filter press consists of a number of plates or trays which are held together between a fixed and moving end.

Description of the Process

On the surface of each individual plate is mounted a filter cloth. The sludge is pumped into the press and passes through feed holes in the trays along the length of the press until the cavities or chambers between the trays are completely filled. The sludge is then entrapped, and a cake begins to form on the surface of the cloth. The water passes through the fibers of the cloth, and the solids are retained.

Drainage ports are at the bottom of the trays. The filtrate is collected and discharged to a common drain. As the filter media becomes coated with sludge cake, the flow of filtrate through the pressure filter drops to near zero indicating that the capacity of the filter has been exhausted. The filter is then vented and opened to discharge the dewatered sludge to a hopper or conveyor. After closing, the filter is ready for a new cycle. Figures 7-29 and 7-30 show the design and operation of a typical filter press.

Advantages and Limitations

The pressures which may be applied to a sludge for removal of water by filter presses that are now available range from 5.1 atm to 13.2 atm. In comparison, a centrifuge may provide forces at 239 atm and a vacuum filter, 0.69 atm. As a result of these greater pressures, filter presses offer the following advantages:

1. Filtration efficiency is improved, especially on materials which are difficult to filter.

2. Requirements for chemical pretreatment are frequently reduced.

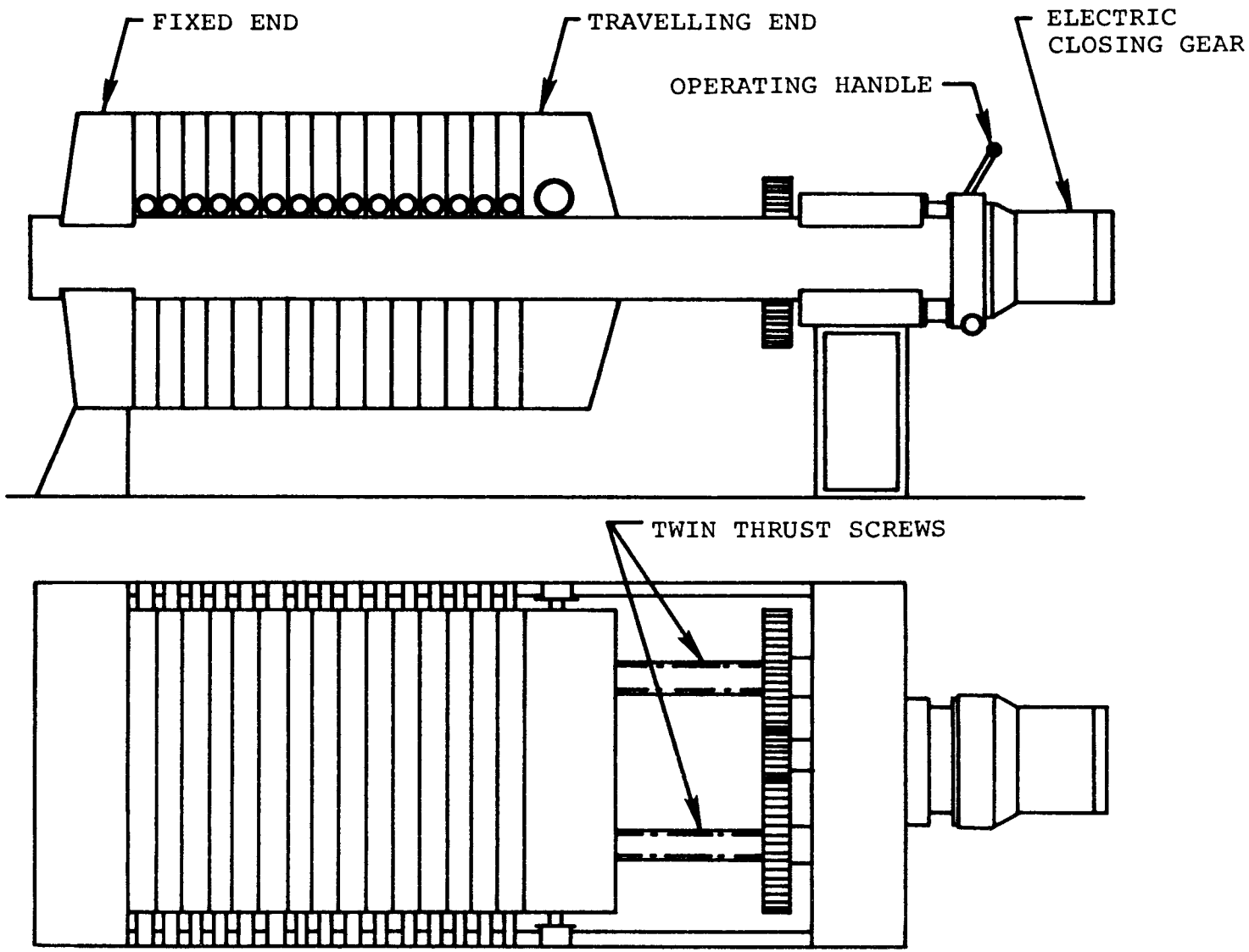

FIGURE 7—29
TYPICAL PRESSURE FILTER

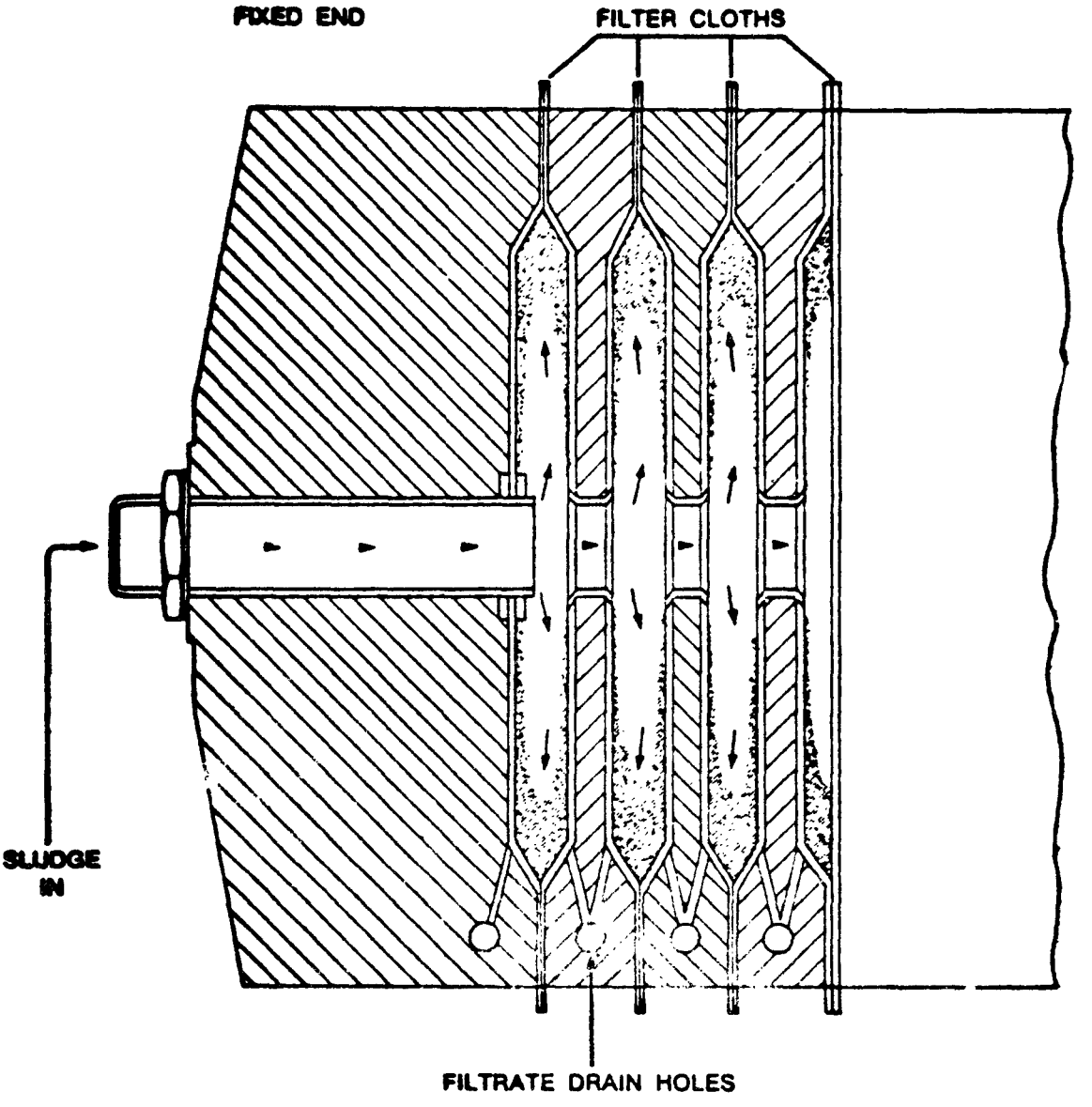

FIGURE 7–30
FEED FLOW AND FILTRATE DRAINAGE.

3. Solids concentration in the final cake is increased.

4. Filter cakes are more easily accommodated by a material handling system.

5. Filtrate quality as measured by suspended solids content is improved.

6. Maintenance is minimal because very few moving parts are involved.

Two disadvantages associated with past operations have been the short life of filter cloths and lack of automation. New, synthetic fibers have largely offset the first of these disadvantages as they have increased cloth life up to 12-18 months. Units with automated feeding and pressing cycles are also now available. It is only at the end of the cycle that the process becomes semiautomatic as no foolproof automatic method of discharging the filter cake is yet available.

Specific Performance

In a typical pressure filter, chemically preconditioned sludge held in the pressure filter for one to three hours under pressures varying from 5.1 to 13.2 atm (60 to 180 psig) exhibited final moisture contents between 50 and 75 percent.

Operational Factors

Reliability - High, assuming proper design and control. Sludge characteristics which will dictate design and control parameters are listed below:

1. Size, shape, and electrical charge of the solid particles.
2. Solids concentration and volatiles content.
3. Chemical composition.
4. Compressibility.
5. Viscosity.

Pretreatment such as screening or coagulant addition may be a process requirement.

Maintainability - Maintenance consists of periodic cleaning or replacement of the filter media, drainage grids, drainage piping, filter pans, and other parts of the equipment. Since the removal of the dewatered sludge cake from the filter media is not a fully automatic process, a manual scraping operation is also a maintenance requirement.

Collected Wastes - Sludge dewatered in a filter press may be heat dried and/or directly applied as landfill. The clarified effluent may require further treatment prior to discharge if it is high in dissolved or suspended solids.

Demonstration Status

Eight plants in the 196 plant data base employed the use of a filter press to dewater sludge (ID's 303, 6050, 6077, 1209 31021, 3321, 3322, and 3323). In addition, it has been effectively employed on sludge from domestic waste at the municipal treatment plant in Atlanta, Georgia and at the Sobrante filter plant of the East Bay Municipal System in the San Francisco Bay Area of California.

SLUDGE BED DRYING

Definition of the Process

Sludge bed drying is the process of reducing the water content in a wet substance by spreading the substance on the surface of a sand bed and allowing drainage and evaporation to the atmosphere to dry the sludge. This process is used for the drying of sludge prior to removal to a landfill.

Description of the Process

As a waste treatment procedure, sludge bed drying is employed to reduce the water content of a variety of sludges to the point where they are amenable to mechanical collection and removal to landfill. These beds usually consist of 15.24 to 45.72 cm (6 to 18 inches) of sand over a 30.48 cm (12 inch) deep gravel drain system made up of 3.175 to 6.35 mm (1/8 to 1/4 inch) graded gravel overlying drain tiles.

Drying beds are usually divided into sectional areas approximately 7.62 meters (25 feet) wide x 30.48 to 60.96 meters (100 to 200 feet) long. The partitions may be earth embankments, but more often are made of planks and supporting grooved posts. A typical sludge drying bed is shown in Figure 7-31.

To apply liquid sludge to the sand bed, a closed conduit or a pressure pipeline with valved outlets at each sand bed section is often employed. Another method of application is by means of an open channel with appropriately placed side openings which are controlled by slide gates. With either type of delivery system, a concrete splash slab should be provided to receive the falling sludge and prevent erosion of the sand surface.

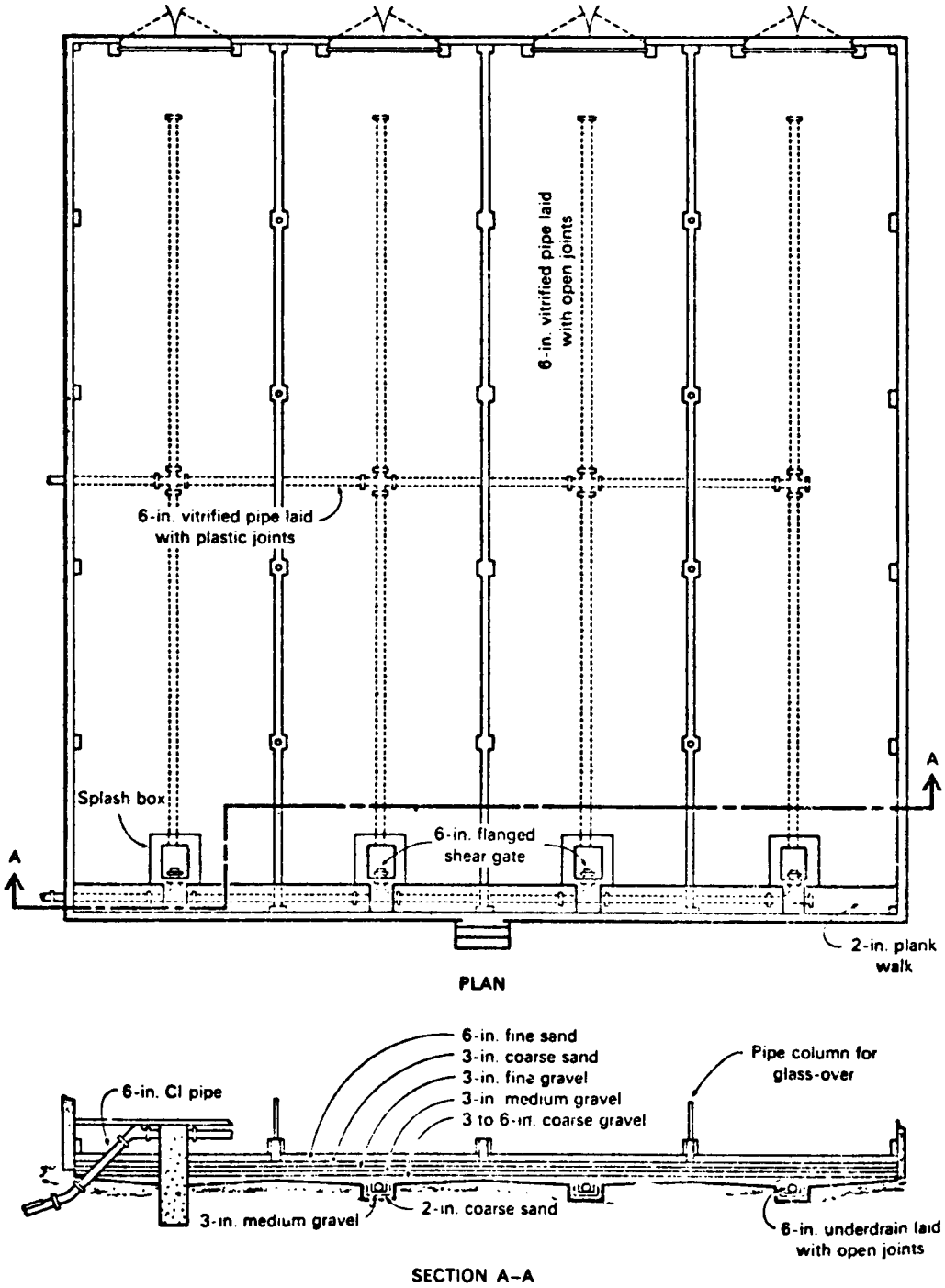

FIGURE 7-31
PLAN AND SECTION OF A TYPICAL SLUDGE DRYING BED.

Where it is necessary to dewater sludge continuously throughout the year regardless of the weather, sludge beds may be covered with a fiberglass reinforced plastic roof. Covered drying beds permit a greater volume of sludge drying per year in most climates because of the protection afforded from rain or snow and because of more efficient control of temperature. Depending on the climate, a combination of open and enclosed beds will provide maximum utilization of the sludge bed drying facilities.

Advantages and Limitations

The main advantage of sand drying beds over other types of sludge drying is the relatively low cost of construction, operation, and maintenance.

Its disadvantages are the large area of land required and long drying times that depend, to a great extent, on climate and weather.

Specific Performance

Dewatering of sludge on sand beds occurs by two mechanisms: filtration of water through the bed, and evaporation of water as a result of radiation and convection. Filtration is generally complete in one to two days and may result in solids concentrations as high as 15 to 20 percent. The rate of filtration depends on the drainability of the sludge.

The rate of air drying of sludge is related to temperature, relative humidity, and air velocity. Evaporation will proceed at a constant rate to a critical moisture content, then at a falling rate to an equilibrium moisture content. The average evaporation rate for a sludge is determined to be about 75 percent of that from a free water surface.

Operational Factors

Reliability - High assuming favorable climatic conditions, proper bed design, and care to avoid excessive or unequal sludge application. If climatic conditions in a given area are not favorable for adequate drying, a cover may be necessary.

Maintainability - Maintenance consists basically of periodic removal of the dried sludge. Sand removed from the drying bed with the sludge must be replaced and the sand layer resurfaced.

The resurfacing of sludge beds is the major expense item in sludge bed maintenance, but there are other areas which may require attention. Underdrains occasionally become clogged and have to be cleaned. Valves or sludge gates that control the flow of sludge to the beds

must be kept watertight. Provision for drainage of lines in winter should be provided to prevent damage from freezing. The partitions between beds should be tight so that sludge will not flow from one compartment to another. The outer walls or banks around the beds should also be watertight.

Collected Wastes - Dried sludge from sludge drying beds is conventionally disposed of in landfills.

Demonstration Status

Sand bed drying of sludge is used by plants with a high solids waste flow. It is used by three plants (ID's 6051, 6073, and 20064) in this data base.

VACUUM FILTRATION

Definition of the Process

Vacuum filtration is a sludge dewatering process which occurs by filtering the sludge phase through a mesh which prevents passage of the solids. A pressure differential is obtained by drawing a vacuum which is the principal driving force. As a waste treatment procedure, vacuum filtration is used to dewater sludge.

Description of the Process

In wastewater treatment plants, sludge dewatering by vacuum filtration is an operation that is generally accomplished on cylindrical drum filters. These drums have a filter medium which may be cloth made of natural or synthetic fibers, coil springs, or a wire-mesh fabric. The drum is suspended above and dips into a vat of sludge. As the drum rotates slowly, part of its circumference is subject to an internal vacuum that draws sludge to the filter medium. Water is drawn through the porous filter cake to a discharge port, and the dewatered sludge, loosened by compressed air, is scraped from the filter mesh. A typical vacuum filter system is shown in Figure 7-32. Vacuum filtration is a widely used technique since it requres less space than a sludge drying bed.

Because the dewatering of sludge on vacuum filters is relatively expensive per pound of water removed, the liquid sludge is frequently thickened prior to processing. If coagulating agents are to be employed in the thickening process, elution (washing) of the sludge to remove soluble materials will reduce its chemical demand, thereby, effecting a coagulant cost savings.

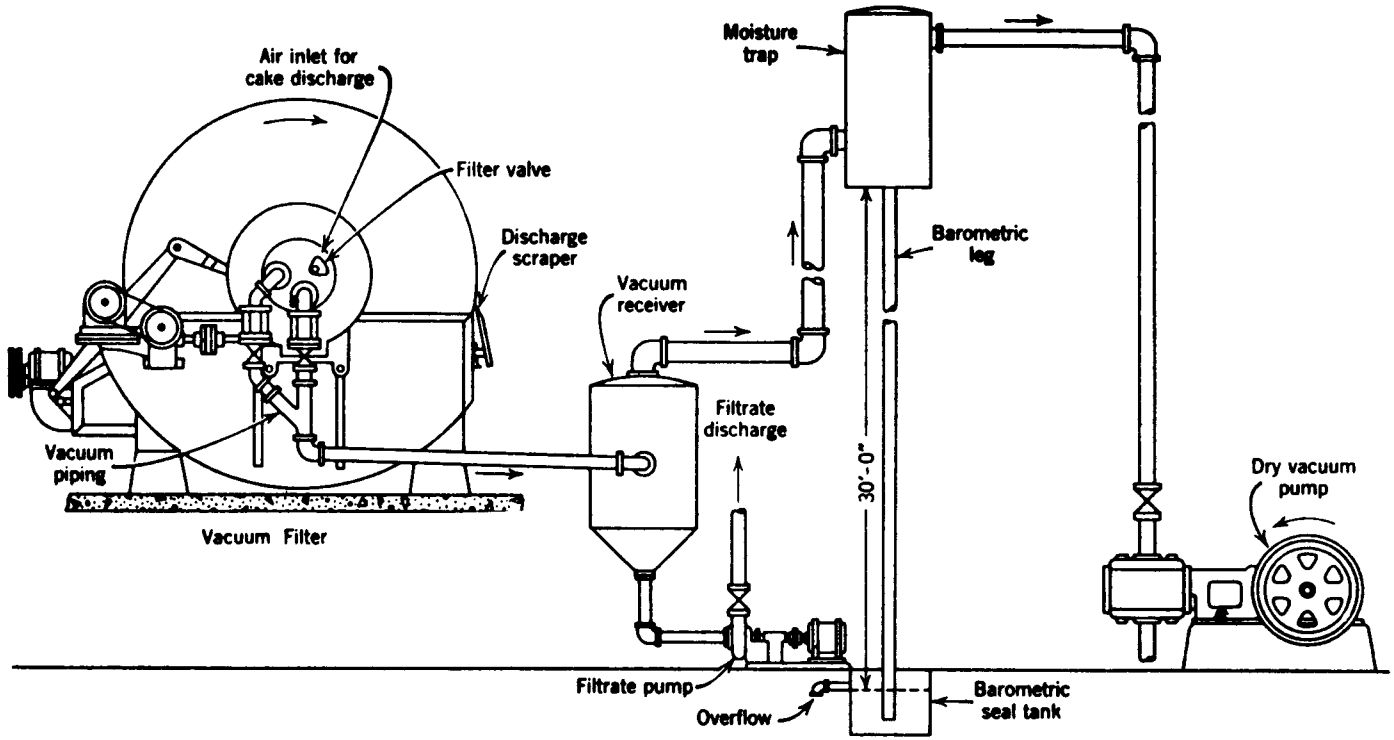

FIGURE 7–32
VACUUM FILTRATION SYSTEM.

Advantages and Limitations

Although the initial cost and area requirement of the vacuum filtration system are higher than that of a centrifuge, the operating cost is lower, and no special provisions for sound and vibration protection need be made.

The dewatered sludge from this process is in the form of a moist cake and can be conveniently handled. A disadvantage of this process is that its liquid effluent, although of higher purity than a liquid effluent from a centrifuge may require treatment prior to discharge.

Specific Performance

The function of vacuum filtration is to reduce the water content of sludge, so that the proportion of solids increases from the 5 to 10 percent range to about 30 percent. After dewatering the sludge is a moist cake and is easily handled.

Operational Factors

Reliability - Maintenance consists of the cleaning or replacement of the filter media, drainage grids, drainage piping, filter pans, and other parts of the equipment. Experience in a number of vacuum filter plants indicates that maintenance consumes approximately 5 to 15 percent of the total time. If carbonate buildup or other problems are unusually severe, maintenance time may be as high as 20 percent. For this reason, it is desirable in the selection of vacuum filters to provide one or more spare units.

If intermittent operation is to be employed, the filter equipment should be drained and washed each time it is taken out of service and an allowance for wash time should be made in the selection of sludge filtering schedules.

Collected Wastes - Sludge dewatered in the vacuum filtration process may be disposed of by direct application as landfill. The filter effluent, if high in dissolved or suspended solids may require further treatment prior to discharge and is usually returned to the treatment facility influent.

Demonstration Status

Vacuum filter systems have been used successfully at many industrial and municipal treatment facilities. Of the electroplating plants in this data base, 21 employed vacuum filtration (Reference Table 7-13). At present, the largest municipal installation with vacuum filters is at the West Southwest wastewater treatment plant of Chicago, Illinois where 96 large units have been in service for many years. At the Milwaukee, Wisconsin treatment plant, the initial filters installed in 1925 functioned approximately 25 years and then were replaced with larger units. Original vacuum filters at Minneapolis-St. Paul, Minnesota now have over 28 years of continuous service, and Chicago has some units with similar or greater service life.

TABLE 7-13

ELECTROPLATING PLANTS THAT CURRENTLY EMPLOY

VACUUM FILTRATION

2062	4071
6037	6074
6087	6088
902	1208
1263	15070
20010	2020
20073	20077
20080	2811
31016	36040
4101	41041
43003	

CENTRIFUGATION

Definition of Process

Centrifugation is the use of centrifugal force to concentrate the solids contained in a solid/liquid system. Centrifugal force is effective because of the density differential between the insoluble solids and the liquid in which they are contained.

As a waste treatment procedure, centrifugation is applied to the dewatering of sewage and waste sludges.

Description of the Process

There are three common types of centrifuges applicable to waste streams. These are the disc, basket, and conveyor type centrifuges. All three operate by removing solids under the influence of a centrifugal force. The fundamental difference between the three types is the method by which solids are collected in and discharged from the bowl.

In the disc centrifuge, the sludge feed is distributed between narrow channels that are present as spaces between stacked conical discs. Suspended particles are collected and discharged continuously through small orifices in the bowl wall. The clarified effluent is discharged through an overflow weir.

A second type of centrifuge which is useful in dewatering waste sludges is the basket centrifuge. In this type of centrifuge, the sludge feed is introduced at the bottom of the basket, and solids collect at the bowl wall while clarified effluent overflows the lip ring at the top. Since the basket centrifuge does not have facilities for continuous discharge of collected cake, operation requires interruption of the feed for cake discharge for a minute or two in a 10 to 30 minute overall cycle.

The third type of centrifuge commonly used in sludge dewatering is the conveyor type. In this type, sludge is fed through a stationary feed pipe into a rotating bowl in which the solids are settled out against the bowl wall by centrifugal force. From the bowl wall, they are moved by a screw to the end of the machine, at which point thay are discharged. The liquid effluent discharges out of effluent ports after passing the length of the bowl under centrifugal force. Figure 7-33 shows the design and operation of a typical conveyor type centrifuge.

Advantages and Limitations

Some of the advantages of sludge dewatering centrifuges are that they have minimal space requirements, produce relatively dry cakes, and show a high degree of effluent clarification. The operation is simple, clean, and relatively inexpensive. The area required for a centrifuge installation is less than that required for a vacuum filter of equal capacity, and the initial cost is lower.

One limitation, however, of the centrifuge is that higher power costs will partially offset the lower initial cost. Special consideration must also be given to providing sturdy foundations and soundproofing because of the vibration and noise that result from a centrifuge. Adequate electrical power must also be provided since large motors are required. Another difficulty encountered in the operation of centrifuges has been the disposal of the concentrate which is relatively high in suspended, nonsettling solids.

Specific Performance

The efficiency of the dewatering of sludge by centrifugation is dependent on such factors as feed rate, rotational velocity of the drum, and sludge composition and concentration. As a general rule, assuming correct design and operation, moisture may be reduced to a

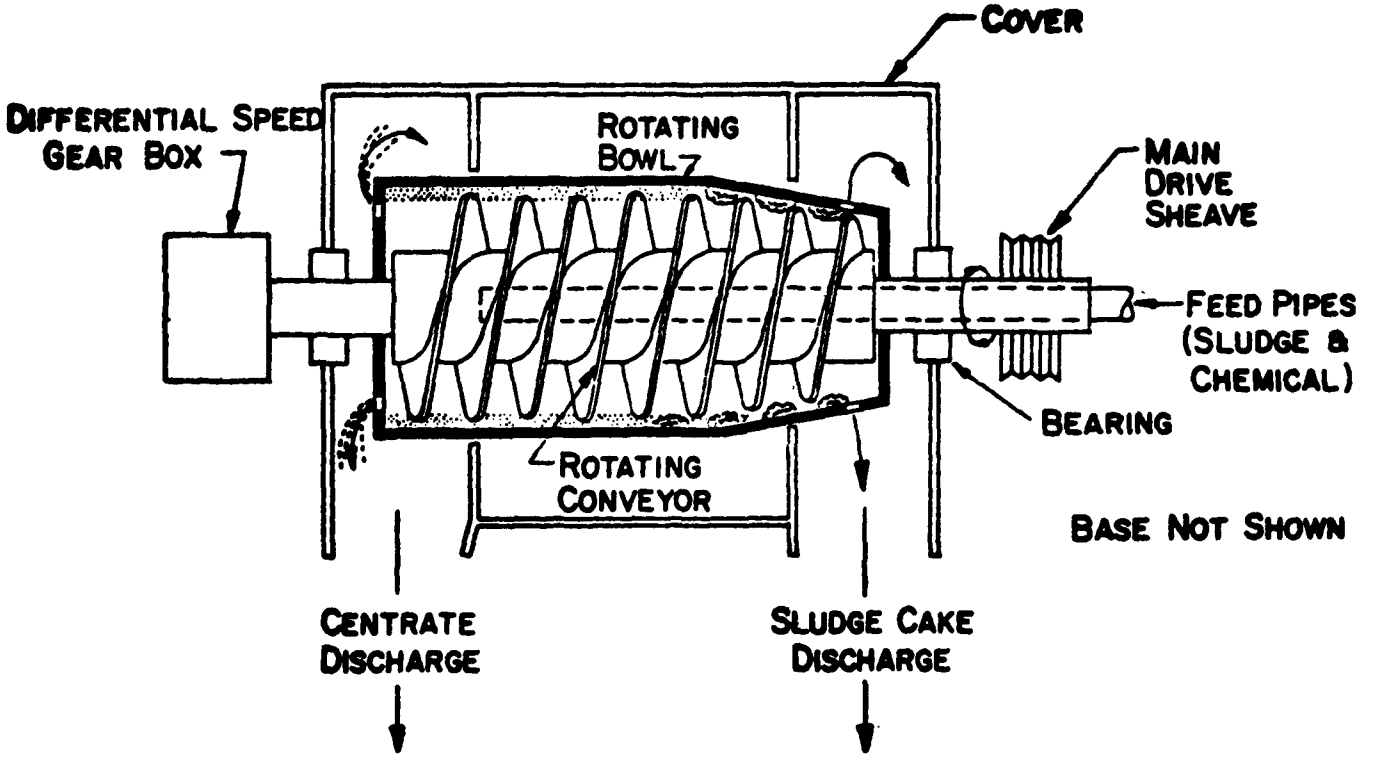

FIGURE 7-33
CONVEYOR TYPE SLUDGE DEWATERING CENTRIFUGE

point where the total solids content of the dewatered sludge is in the range of 30 to 35 percent.

Operational Factors

Reliability - High, assuming proper control of operational factors such as sludge feed, consistency, and temperature. Pretreatment such as grit removal and coagulant addition may be necessary. Pretreatment requirements will vary depending on the composition of the sludge and on the type of centrifuge employed.

Maintainability - Maintenance consists of periodic lubrication, cleaning, and inspection. The frequency and degree of inspection required will vary depending on the type of sludge solids being dewatered and the maintenance service conditions. If the sludge is abrasive, it is recommended that the first inspection of the rotating assembly be made after approximately 1,000 hours of operation. If the sludge is not abrasive or corrosive, then the initial inspection might be delayed. Centrifuges not equipped with a continuous sludge discharge system will require periodic shutdowns for manual sludge cake removal.

Collected Wastes - Sludge dewatered in a centrifuge process may be disposed of by direct application as landfill. The clarified effluent (centrate), if high in dissolved or suspended solids, may require further treatment prior to discharge.

Demonstration Status

Twelve plants in the 196 plant electroplating data base employ centrifugation (ID's 6075, 6086, 11050, 1205, 1902, 1924, 20070, 20079, 3324, 2501, 3327, and 33071). The solid bowl conveyor centrifuge is the machine most commonly used.

SLUDGE DISPOSAL

There are several methods of disposal of sludges from industrial wastewater treatment. The two most common techniques are landfilling by the company on its own property and removal by licensed contractor to an outside landfill or reclamation point. Other disposal techniques used for industrial waste include incineration, lagooning, evaporative ponds, and pyrolysis. This latter technique produces a dewatered ash or sludge which requires ultimate disposal by either contractor hauling or on-site landfilling.

OTHER CONTROL AND TREATMENT PROCESSES

Additional control and treatment processes are in various stages of development but were not observed either at the plants visited or in a

laboratory setting. The processes reviewed are: electrochemical treatment of chromium and cyanide, extraction, adsorption, and a variety of heavy metal chemical precipitation techniques.

Electrolytic Oxidation

Electrolytic oxidation reduces free cyanide and cyanate levels in industrial wastewaters to less than 1.0 mg/l. The process can also be applied to the electrochemical oxidation of nitrite to nitrate. In both cases the reduction is accomplished without the use of treatment chemicals. However, if reaction time becomes a problem, the cycle can be accelerated by augmenting the system with a chemical (hypochlorite) treatment as long as the cyanide concentration level is less than 200 mg/l.

The process equipment consists of a reactor, a power supply, a storage tank, and a pump. Maintenance is minimal since only the pump has moving parts. The reactor is replaced at infrequent intervals and a rebuilt reactor can be installed within a few hours.

This system has been used commercially only for heat treating applications; however it should be equally appropriate for electroplating wastes. Its application for electroplating is still in the development stage.

Electrolytic oxidation has the following advantages:

1. Low operating costs with nominal capital investment, relative to alternative processes.

2. No requirement for chemicals, thereby eliminating both their storage and control.

3. No need to dilute or pretreat the wastewater as the process is most efficient at high cyanide concentration levels.

Performance has been demonstrated on a commercial scale and shown to result in a reduction in the cyanide concentration level from 3500 mg/l to less than 1.0 mg/l in 160 hours. Process by-products are nitrogen, carbon dioxide, and a trace of ammonia - all are vented to the atmosphere, and there is no noticeable odor.

At the present time, the process is not in use at any of the plants in the electroplating data base. However, there is currently a unit in operation which is handling the cyanide bearing wastewater generated by a heat treating operation.

Electrolytic Reduction

This process has been developed for the removal of chromium from metal finishing and chemical manufacturing wastewaters. It involves an electrochemical reaction in which consumable iron electrodes in the presence of an electrical current generate ferrous ions which react with chromate ions in solution. The reaction produces chromic hydroxides and ferric hydroxides that can be precipitated in a pond or clarifier without the need for further chemical addition.

In addition to the electrochemical unit, the only equipment required is a pump and a clarifier or pond for settling. As long as the pH of the entering stream is within the range of 6.0 to 9.0, no pH adjustment is necessary for either the influent or effluent streams.

Although the process was developed for removal of chromium and zinc from cooling tower discharge, it has also been applied for treatment of electroplating wastewaters. The best application of the process is to low concentration, high volume wastewater streams.

The process is capable of removing hexavalent chromium from wastewater to less than 0.05 mg/l with input conditions of 8.0 mg/l and 88 gpm. In addition to chromium, laboratory tests have also shown the capability of the process to remove nickel to 2.1 mg/l, copper to 0.2 mg/l, silver to 0.05 mg/l, and tin to less than 5 mg/l. Reaction time is instantaneous at a pH of 7.0 to 8.0; thus retention time is determined by reactor geometry and mixing time.

There are approximately 30 electrolytic reduction systems in operation in a variety of industries. Three are in service at plants in the electroplating industry at the present time.

Cyanide Extraction

This process of concentrating and recovering cyanides and metal cyanides uses a continuous countercurrent solvent extraction technique based on a quaternary amine solvent. The amine solvent is regenerated by dilute sodium hydroxide stripping, and the metal and cyanides can be recycled to the plating bath, or salvaged.

A bench scale plant has been designed and fabricated to evaluate the process for treating cyanide wastes from the electroplating industry. Free cyanide and zinc cyanide have been successfully removed, concentrated, and recovered in a series of demonstration runs.

Testing has been done on a laboratory scale over a period of 3 1/2 years and is currently inactive.

Electrochemical Chromium Regeneration

Chromic acid baths, which are used for electroplating, anodizing, etching, chromating, and sealing, must be continuously discarded and replenished to prevent buildup of trivalent chromium. This is normally accomplished, at least in part, through dragout that is converted to sludge by end-of-pipe treatment. An electrochemical system employing a lead anode and nickel cathode has been developed to recover chromium by converting the trivalent form to the hexavalent form. In this electro-oxidation process, trivalent chromium is converted to the hexavalent (dichromate) form at the lead anode. Hydrogen is released at the nickel cathode. The reaction is carried out at 68°C, a cell voltage of 4.5 volts, and anode current density of 21 mA/sq cm, and a cathode current density of 630 mA/sq cm.

The electro-oxidation process has been applied commercially (one installation) to regeneration of a plastic etchant. In this particular installation, chromic acid dragged out of the etching bath into the first stage of a countercurrent rinse is concentrated by evaporation and returned to the etching bath. This closed loop tends to cause rapid buildup of trivalent chromium. However, the etchant is recirculated through an electro-oxidation unit, where the trivalent chromium is oxidized to the hexavalent form. The current efficiency for this process is 80 percent at concentrations above 5 g/l. If a trivalent chromium concentration of less than 5 g/l were required, experiments have shown that the current efficiency could drop as low as 49 percent.

High pH Precipitation

The treatment of solutions of chelated copper with calcium hydroxide, calcium oxide (lime), calcium chloride, or calcium sulfate at a pH of 11.6 - 12.5 will effectively remove copper from the solution as a copper hydroxide. Flocculation of the copper hydroxide with an anionic polyelectrolyte accelerates the settling of sludge. This process works well with both concentrated baths and dilute rinse baths.

The process equipment required for a high pH system includes holding and treatment tanks if the operation is conducted on a batch basis. Also needed are pumps to transfer the wastewater and a settling tank to concentrate the precipitate.

Although results of lab tests have shown that the process is applicable to removing copper from complexed copper solutions with calcium ions at a high pH, the effectiveness of treatment is determined by the structure of the complexing agent in the solution. If the nitrogen in the complexing agent is completely substituted with carboxyl groups, removal of copper by the calcium ion is almost

complete. Complexing agents containing no carboxyl group and only hydroxyl groups show no copper removal. The addition of small amounts of sulfide ions or dithiocarbamates after the calcium ion treatment aids in further removal of copper. Electroless nickel solutions were also prepared under laboratory conditions and the results show the calcium treatment at a high pH to be effective.

Removal effectiveness is dependent on the form of the metal in solution. The following removal efficiencies are typical for copper:

Copper - NTA complex 99.9%
Copper - HEDTA complex - 97.0%
Copper - NDA complex - 95.0%
Copper - Tartrate complex - 60 to 85%
Copper - Citrate complex - 60 to 85%
Copper - Triethanol and Diethanol Amine complex - 0%
Commercial copper complexes - 99.9%

The high pH precipitation process is presently in the laboratory stage of development.

Hydrogen Peroxide Oxidation - Precipitation

The hydrogen peroxide oxidation - precipitation treatment process treats both the cyanide and metals in cyanide wastewaters containing zinc or cadmium. In this process, cyanide rinse waters are heated to 120 - 130 F (49 - 54 C) and the pH is adjusted to 10.5 - 11.8. Formalin (37% formaldehyde) is added, while the tank is vigorously agitated. After 2-5 minutes, a proprietary peroxygen compound (41% hydrogen peroxide with a catalyst and additives) is likewise added. After an hour of mixing, the reaction is complete. The cyanide is converted to cyanate and the metals are precipitated as oxides or hydroxides. The metals are removed from solution by either settling or filtration.

The chemical reactions which take place are as follows:

The formaldehyde reacts with cyanide to form an organic nitrite:

$$CN + HCHO + H_2O = HOCH_2CN + OH$$

The hydrogen peroxide converts cyanide to cyanate in a single step:

$$CN + H_2O_2 = NCO + H_2O$$

The formaldehyde also acts as a reducer breaking zinc and cadmium ions apart from the cyanide:

$$Zn(CN)_4 + 4HCHO + 4H_2O = 4HOCH_2CN + 4OH + Zn$$

The metals subsequently react with the hydroxyl ions formed and precipitate as hydroxides or oxides:

$$Zn_2 + 2OH = ZnO + H_2O$$

The main pieces of equipment required for this process are two holding tanks. These tanks must be equipped with heaters and air spargers or mechanical stirrers. These tanks may be used in a batch or continuous fashion with one tank being used for treatment while the other is being filled. A settling tank or a filter is needed to concentrate the precipitate.

The hydrogen peroxide oxidation - precipitation process is applicable to cyanide-bearing electroplating wastewaters, especially those from cyanide zinc and cyanide cadmium electroplating. A disadvantage of this process for treating wastewater being discharged to surface waters is the BOD levels that result from the addition of formaldehyde.

In terms of waste reduction performance, this process is capable of reducing the cyanide ion level to less than 0.1 mg/l and the zinc or cadmium to less than 1.0 mg/l.

This treatment process was introduced in 1971 and is being used in approximately forty individual facilities.

Oxalation

This process involves chemical treatment of mixed plating plant sludges to separate and recover metals such as chromium, copper, and nickel. Sludges are treated with oxalic acid, then ammonia, and finally, sodium hydroxide. Bivalent copper, nickel, and zinc become insoluble oxalates; trivalent chromium and iron are extracted and pH adjusted. The remaining oxalates extract the other metals in the sludge as hydroxides.

Because this is a chemical treatment process, the only significant equipment required is a treatment tank and pumps for sludge and fluid transfer.

The process has been demonstrated on various plating sludges. Chromium, copper, nickel, iron and zinc have been recovered. Tests show that chromium removal from the sludge is nearly complete.

This process was developed in Japan and is still in the laboratory research stage.

Activated Carbon Adsorption

Adsorption is defined as the adhesion of dissolved molecules to the surface of solid bodies with which they are in contact. Those molecules retained in the interior of any solid are subjected to equal forces in all directions, whereas molecules on the surface are subjected to unbalanced forces. This results in an inward force which can only be satisfied if other molecules become attached to the surface. Granular activated carbon particles have two properties which make them effective and economical as adsorbents. First they have a high surface area per unit volume which results in faster, more complete adsorption and secondly they have a high hardness value which lends itself to reactivation and repeated reuse.

The adsorption process typically uses preliminary filtration or clarification to remove insolubles. Next, the wastewaters are placed in contact with carbon so adsorption can take place. Normally two or more beds are used so that adsorption can continue while a depleted bed is reactivated. Reactiviation is accomplished by heating the carbon to 1600 - 1800 Degrees F to volatize and oxidize the dissolved contaminants. Oxygen in the furnace is normally controlled at less than 1% to effect selective oxidation of contaminants. The reactivated carbon has been found to have a slightly higher removal efficiency of contaminants in wastewater than virgin carbon. This is because the contaminants are adsorbed in the larger pores of the carbon, and during reactivation many of the smaller pores are fractured to create a higher proportion of larger pores per unit weight of carbon.

The equipment necessary for an activated carbon adsorption treatment system consists of the following: a preliminary clarification and/or filtration unit to remove the bulk of the metallic solids; two or three containers packed with activated carbon used for the actual adsorption operation; a holding tank located between the adsorbers; and pumps for transferral of liquid between the adosrbers. Unless a reactivation service is utilized, a furnace and associated quench tanks, spent carbon tank, and reactivated carbon tank are required for reactivation.

The activated carbon adsorption treatment process when used on wastewaters following clarification or filtration is applicable to plating wastes of all types. In addition to its ability to remove metals, it also removes a large percentage of any organic contaminants in the waste stream. This reduces the BOD, COD, and TOC concentrations in the effluent.

Metals reduction in wastewaters by an activated carbon adsorption system in conjunction with a clarification system is shown in Tables 7-14 and 7-15. Treatment is usually continuous and systems are

designed for reactivation intervals of approximately one month. Loss of carbon during reactivation can normally be held to 5% or less.

Activated carbon adsorption systems have been in full scale commercial use for years, but its application for metals removal is relatively new.

Sulfide Precipitation

In this process heavy metals are removed as sulfide precipitates. Sulfide is supplied by addition of very slightly soluble metal sulfide which has a solubility somewhat greater than that of the sulfide of the metal to be removed. Normally, iron (ferrous) sulfide is used. It is fed into a precipitator where excess sulfide is retained in a sludge blanket that acts both as a reservoir of available sulfide and as a medium to capture colloidal particles.

The process equipment required includes a pH adjustment tank, a precipitator, a filter, and pumps to transport the wastewater. The filter is optional and may be a standard, dual media pressure filter.

The process is applicable for treatment of all heavy metals. It offers a distinct advantage in the treatment of wastewater containing hexavalent chromium. The ferrous sulfide acts as a reducing agent at a pH of 8.0 to 9.0 and this reduces the hexavalent chromium and then precipitates it as a hydroxide in one step without pH adjustment. Therefore, hexavalent chromium wastes do not have to be isolated and pretreated by reduction to the trivalent form. All metals other than chromium are removed as sulfides.

TABLE 7-14

REMOVAL OF METALS BY

LIME PRECIPITATION - ACTIVATED CARBON COMBINATION

Metal	Initial Concentration (mg/l)	Percent Removal	Residual Metal (mg/l)
Silver	0.5	98.0	0.010
Beryllium	0.1	99.5	0.001
Bismuth	0.6	96.0	0.024
Cobalt	0.5	95.0	0.025
Mercury	0.5	91.0	0.045
Antimony	0.6	52.0	0.288
Selenium	0.5	95.0	0.025
Tin	0.5	92.0	0.040
Titanium	0.5	95.3	0.024
Thallium	0.5	72.0	0.140
Vanadium	0.5	91.0	0.045
Manganese	5.0	98.2	0.090
Nickel	5.0	99.5	0.025
Zinc	5.0	76.0	1.200
Copper	5.0	90.0	0.500
Cadmium	5.0	99.6	0.020
Barium	5.0	81.0	0.950
Lead	5.0	99.4	0.030
Chromium	5.0	98.2	0.090
Arsenic	5.0	84.0	0.800
Mercury	0.5	92.0	0.040

TABLE 7-15

REMOVAL OF METALS BY

FERRIC CHLORIDE - ACTIVATED CARBON COMBINATION

Metal	Initial Concentration (mg/l)	Percent Removal	Residual Metal (mg/l)
Silver	0.5	99.1	0.005
Beryllium	0.1	98.9	0.001
Bismuth	0.5	96.2	0.009
Cobalt	0.5	30.0	0.350
Mercury	0.05	99.0	0.001
Molybdenum	0.6	80.0	0.120
Antimony	0.5	72.0	0.140
Selenium	0.1	80.0	0.020
Tin	0.5	98.5	0.008
Titanium	0.5	90.0	0.050
Thallium	0.6	45.0	0.330
Vanadium	0.5	97.8	0.011
Manganese	5.0	17.0	4.150
Nickel	5.0	37.0	3.150
Zinc	5.0	94.0	0.300
Copper	5.0	96.0	0.200
Cadmium	5.0	98.6	0.070
Barium	5.0	95.6	0.220
Lead	5.0	99.1	0.045
Chromium	5.0	99.3	0.035
Arsenic	5.0	97.1	0.145
Mercury	0.5	98.0	0.010

Data on the performance of this process show that concentrations of less than 0.05 mg/l have been achieved for most metals, with levels down to ppb for some. Sludges are much less subject to leaching than landfilled hydroxide sludges. This removal efficiency was demonstrated by the sulfide precipitation unit employed at plant 27045.

Full size commercial units are presently produced by two manufacturers and are in operation at several installations. These units are essentially the same, except that one operates at an alkaline pH and the other runs under acid conditions.

Soluble Sorbent Clarification

Soluble sorbent clarification is a treatment process which utilizes a reagent added to the wastewater to adsorb and precipitate various metals within a clarifier. Precipitation occurs at one pH level rather than at different pH levels as is normal for a clarification process. In its soluble form the reagent acts as an adsorbent for metal ions in solution. The pH of the solution is raised to 8.5 - 9.0 by addition of sodium hydroxide or lime. In this pH range, the reagent is insoluble and precipitates with the metals. The supernatant in the clarifier is discharged, and the solids are pH adjusted with acid. This resolubilizes the adsorbent which is recycled for reuse. The heavy metal sludges are isolated and dewatered for disposal.

The equipment necessary for the soluble sorbent clarification process consists of a precipitation tank for pH adjustment of the wastewater, a clarifier for solids settling, and pumps for transferral of water and sludges.

The soluble sorbent clarification process is applicable to all types of plating wastewaters containing all combinations of the common metals - copper, nickel, chromium, cadmium, and zinc.

Pilot scale evaluation has been completed, and the process is now ready for commercial application. Pilot scale tests have proven that the system is capable of reducing copper, nickel, zinc, and cadmium to 0.02 - 0.05 mg/l and chromium to 0.1 mg/l. The process also minimizes suspended solids in the effluent.

Peat Adsorption

Peat adsorption is a polishing process that may be added to a wastewater treatment system following a conventional clarifier to achieve very low effluent concentrations of metals. The removal mechanism is chemisorption by the particles of peat. The peat is

supported on a stainless steel mesh belt, which is configured such that there are two wastewater passes through the peat mat.

The contacting of wastewaters with peat is accomplished with the following equipment: a mat generator, a contacting device, and a system for peat disposal. Also required is a pump to transfer the water and a dewatering device such as a filter press. Generation of a mat of peat is achieved by continuous feed of peat to a wetting tank where it is slurried and deposited on the metal mesh belt. After use, the peat can be burned or used for landfill.

The use of peat moss in the treatment of wastewater is applicable to waters containing metals such as mercury, cadmium, zinc, copper, iron, nickel, chromium, lead, and organic matter such as oil and detergents. Solutions containing hexavalent chromium require a special technique for such treatment. Chromium bearing wastewater must first be treated with ferric chloride and sodium sulfide at a pH in the range of 5.0 to 7.0. A precipitate is formed which settles easily. Contacting the pretreated water with peat then reduces the remaining chromium below a detectable level.

For initial concentrations of metals at 1.0 mg/l or higher, preliminary precipitation is required. For solutions with a concentration lower than 1.0 mg/l, a simple pH adjustment to a level between 6.0 and 8.0 followed by contact with the peat produces an effective treatment. Table 7-16 contains the results obtained on a pilot plant with a 20,000 gpd capacity.

The process is not in use at any of the plants in the electroplating data base, although it is in operation at a dye making plant.

Starch Xanthate

Insoluble starch xanthate, when added to wastewater, exchanges sodium ions for other metal ions and appears to be effective at varying pollutant concentration levels. It can be added in the solid form or in the form of a slurry and has proved to be effective over a pH range of 3.0 to 11.0 with maximum effectiveness above 7.0. The resulting metal precipitates may be removed by settling, centrifugation or filtration.

TABLE 7-16

TREATMENT OF WASTE WATERS CONTAINING METALS

Case No.	Before Treatment (mg/l)	After Treatment (mg/l)	Treatment
1	Pb 20 Sb 2.5 Cu 1.0 Zn 1.5 Ni 2.5 pH 1.6	0.025 0.90 0.2 0.25 0.07 7.1	Adjustment of pH in the range of 8.0 with lime. Settling. Contacting with peat.
2	Cu 250 Ni 67.5 Zn 7.5 pH 2.5	0.24 0.5 0.08 7.2	As above.
3	Cu 26,400 Ni 5,000 Zn 10 pH 0.1	0.24 0.5 0.16 7.2	As above.
4	Cr+6 36,000 pH 1.5	0.04 7.0	Adjustment of pH at 7.0 with lime. Treatment with $FeCl_3/Na_2S$. Settling. Contacting with peat.
5	Cu 5.0 Zn 4.6 Fe 1.0 Ni 13.5 CN 36.0 pH 7.75	0.25 0.10 0.05 0.6 0.7 8.0	Addition of $FeSO_4$ and Na_2S. Settling. Contacting with peat. Further reduction of CN to 0.03 by aeration.

When used in batch treatment operations the metal-xanthate sludge settles rapidly. With a continuous flow stream, a clarifier, centrifuge or a filter should be used.

The process offers a new way to recover metals dissolved in water. Recovering these metals permits reuse. The use of starch xanthate is effective in removal of metals from wastewaters that have concentrations of less than 100 mg/l. If initial metal concentrations exceed this limit, other treatment processes would be required for initial control. The starch xanthate process could then be used as a secondary treatment to further lower metal concentrations. Insoluble starch xanthate (ISX) has been shown to be effective as a filter precoat, and is in use at one plating facility to remove nickel, copper , tin, and lead. ISX-metal sludge settles rapidly and dewaters to 50 - 90% solids content after filtration or centrifugation.

Laboratory tests were performed on 1000 ml solutions containing specific metals at known concentrations and the results of these tests are found in Tables 7-17 and 7-18. The pH of the ISX in Table 7-17 was 3.7 and the pH in Table 7-18 was 3.5. Both solutions were treated to a final pH of 8.9. After treatment, the effluent contains only sodium and magnesium ions from the product. At a pH above 8.5, the metal bearing products precipitate, leaving a clear effluent. The sludge can also be incinerated to recover the metal oxides. If the sludge is landfilled, the metal is bound fairly strongly and would have less chance to be leached out than with a hydroxide sludge.

The starch xanthate process is in the laboratory stage of development; however, at least one electroplater currently uses this process in polishing his wastewater effluent. Several other electroplaters are investigating full scale use of the process.

Oxyphotolysis

Oxyphotolysis uses the oxidizing powers of ozone combined with the bondbreaking energies of ultraviolet light. Ozone is commonly employed for the oxidation of cyanide wastes (refer to text on oxidation by oxygen) for the purpose of freeing metallic ions for removal in a subsequent treatment process. The addition of an ultraviolet light decomposes strongly bound compounds, notably iron cyanide and nickel cyanide. The ultraviolet light frees the cyanide, allowing it to react with the ozone.

TABLE 7-17

REMOVAL OF METAL CATIONS FROM WATER WITH INSOLUBLE STARCH XANTHATE

Metal	Initial Conc., mg./liter	ISX, g.	Residual Conc., mg./liter
Ag	53.94	0.32	0.016
Au	30.00	0.50	0.010
Cd	56.20	0.64	0.012
Co	29.48	0.64	0.090
Cr	26.00	0.64	0.024
Cu	31.77	0.32	0.008
Fe	27.92	0.32	0.015
Hg	100.00	0.64	0.001
Mn	27.47	0.64	0.015
Ni	29.35	0.64	0.160
Pb	103.60	0.64	0.035
Zn	32.69	0.32	0.294

TABLE 7-18

REMOVAL OF METALS FROM DILUTE SOLUTION WITH INSOLUBLE STARCH XANTHATE

Metal	Initial Conc., mg./liter	Residual Conc., mg./liter
Cd	5.62	0.001
Co	2.95	0.010
Cr	2.60	0.026
Cu	3.18	0.005
Fe	2.79	0.001
Hg	10.00	0.0007
Mn	2.75	0.010
Ni	2.93	0.050
Pb	10.36	0.031
Zn	3.27	0.007

In this process, the cyanide wastewater is pumped to a mixing tank where ozone is added and the ultraviolet light is provided by standard germicidal lamps. The free cyanide is destroyed as quickly as ozone is added to the solution; the metal-complexed cyanides require a longer reaction time. The ultraviolet light speeds up the reaction time more effectively and more economically than raising the wastewater temperature. The intermediate oxidation product, cyanate, is also destroyed in the process. In addition, the use of extra reactor stages results in more complete destruction of the metal cyanides. Once the cyanide has been destroyed, the metallic oxides formed can be removed from solution by another type of waste treatment, typically an alkaline precipitation system.

The equipment necessary for an oxyphotolysis treatment system is as follows: an ozone generator to produce ozone from air; lamps to provide ultraviolet light; pumps to transport the wastewater; and a metal removal unit such as a settling tank or a filter.

Oxyphotolysis is applicable for treatment of wastewaters containing cyanide and is especially useful for electroplating rinsewaters containing iron cyanide and nickel cyanide. In addition to its use for cyanides and heavy metals, oxyphotolysis is applicable for toxic organic substances and for disinfection of secondary effluents and source waters.

The oxyphotolysis treatment system has demonstrated a capability to destroy cyanides completely, and, coupled with a metal removal system, is capable of attaining discharge concentrations as low as 0.1 mg/l.

Presently there is one commercial installation treating electroplating wastes though full size commercial units are available.

END-OF-PIPE TECHNOLOGY FOR ELECTROPLATING

The individual treatment technologies discussed in this section can be combined to form systems which are tailored for the specific needs and wastes of an individual plant. Figure 7-34 is a schematic diagram of a system combining chromium reduction, cyanide oxidation, clarification and sludge drying.

Table 7-19 indicates the system elements needed for various plating and metal finishing operations. The exact nature of the system depends on the types of wastewater that must be treated. Chromium reduction and cyanide oxidation are used only if the wastewater contains chromium or cyanide. Clarification includes pH adjustment, precipitation, flocculation, and sedimentation, which may be carried out in one or more vessels or pits. Chelated wastes, if present, should be clarified separately to prevent the chelates from tying up metals in other waste streams. Sludge drying may be carried out in

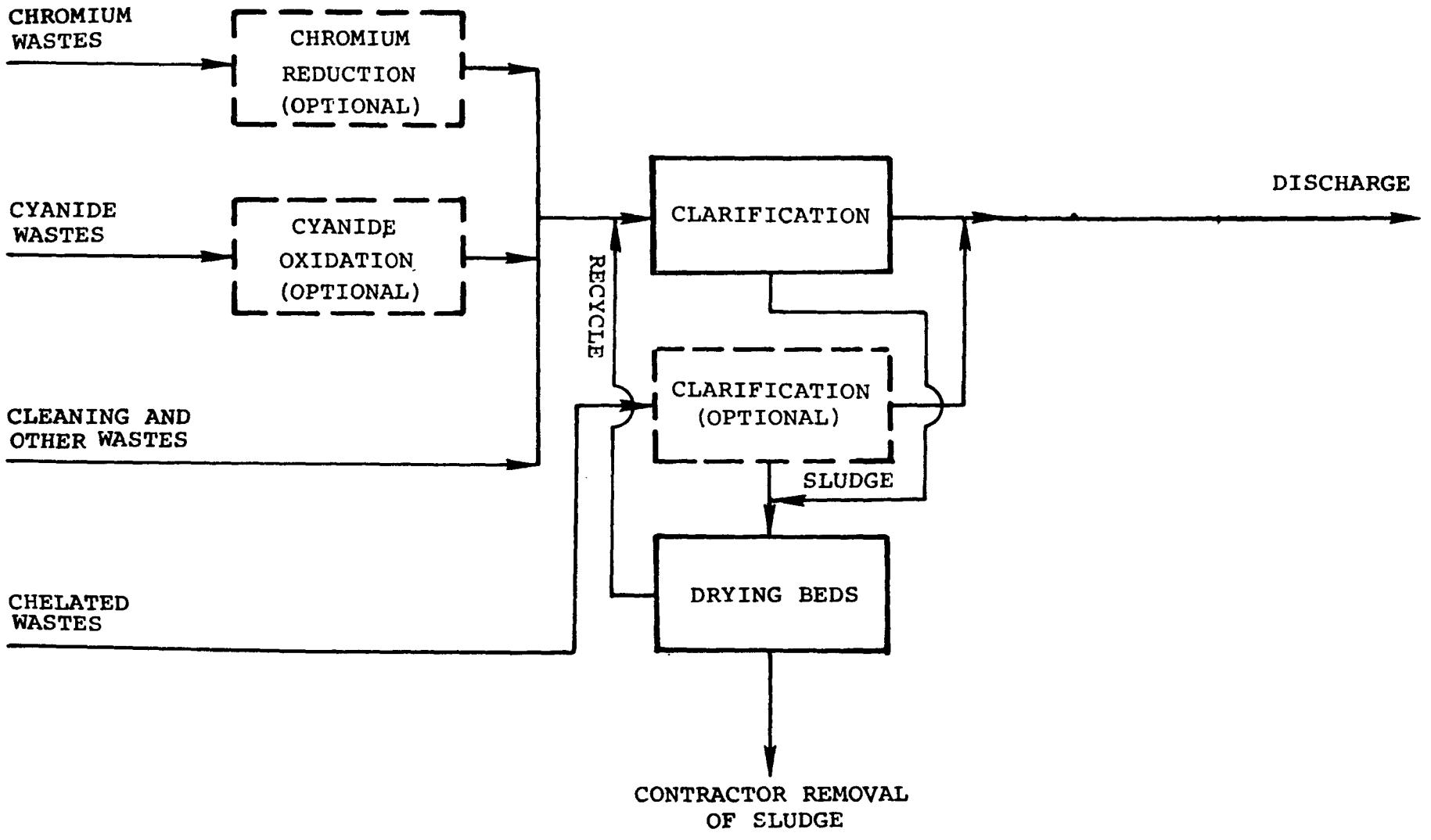

FIGURE 7–34 END–OF–PIPE TREATMENT SYSTEM

TABLE 7-19

TREATMENT SYSTEM ELEMENTS
FOR VARIOUS MANUFACTURING OPERATIONS

Manufacturing Operation	APPLICABLE WASTE TREATMENT SYSTEM ELEMENTS				
	Cyanide Oxidation	Chromium Reduction	Clarification	Segregated Clarification For Chelated Metals	Sludge Drying
Common Metals Plating	X	X	X	-	X
Precious Metals Plating	X	X	X	-	X
Electroless Plating	X	X	X	X	X
Stripping	X	X	X	-	X
Catalyst Deposition	-	-	X	-	X
Anodizing	-	X	X	-	X
Chromating	-	X	X	-	X
Phosphating	-	-	X	-	X
Immersion Plating	X	-	X	-	X
Etching and Milling	-	X	X	-	X

the sludge drying beds indicated or in a vacuum filter, and contractor removal of sludge may sometimes by replaced with landfilling on company property. Addition of a sludge thickening step following clarification is often desirable. In addition, final neutralization (pH adjustment) of the wastewater before discharge may be needed to meet the pH limitation, particularly if nickel salts are removed effectively by clarification at a relatively high pH.

The system shown schematically in Figure 7-34 is not the only approach possible. Many alternative techniques have been encountered in the field. These alternatives range from the use of a settling lagoon to replace the clarifier to the use of reverse osmosis, ion exchange, membrane filtration, diatomaceous earth filtration, and multiple stage rinsing to reduce discharge of pollutants. Although not found as commonly as clarification, most of the individual technologies described earlier are in general use throughout this industry. The use of any particular component or system will depend on the wastes to be treated, space constraints, funding availability, and other factors which involve management judgement.

Many system combinations are capable of adequate performance. However, inadequate control, careless operation or maintenance, or overloading due to inputs of large slugs of concentrated wastes can produce upset conditions that will result in the discharge exceeding the limitations. Concentrated slugs should be metered into the treatment system to preclude overloading. Continuing management attention to operation should be exercised to insure proper performance.

IN-LINE TECHNOLOGY FOR ELECTROPLATING

The individual technologies discussed in the first part of this section may be used singly or in combinations to reduce pollutants sufficiently to meet very stringent requirements. In-line treatment systems may have greater pollutant reduction than conventional end-of-pipe treatment and/or stress conservation of raw materials by recycle and reuse. Those in-line treatment systems designed to reduce rinse water consumption while also recovering plating chemicals reduce cost and provide high pollutant removal efficiencies.

The combinations of various techniques to form an in-line treatment system will vary from plant to plant. No single combination can be recommended for all treatment applications. The following paragraphs present the applicability of individual technologies to various operations, and describe a typical treatment system for a model plant.

Applicability of In-line Technologies

Table 7-20 provides a general summary of the applicability of in-line technology to the specific electroplating operations discussed earlier in this section. Current development work is likely to extend the indicated applicability.

Where recovery of plating chemicals and rinse water can be achieved by multistage closed loop rinsing, this is a logical choice. The alternative technologies are generally more complex, more expensive, and more costly to operate compared to closed loop rinsing. In situations where the choice is between reverse osmosis, evaporation, and ion exchange, the relative attractiveness of evaporation is limited by the cost and availability of energy. Reverse osmosis for nickel recovery or ion exchange for nickel or chromium (or other applications) is likely to be a better choice than evaporation. Nevertheless, use of evaporation where appropriate may still represent a significant cost saving (such as results from recovering plating chemicals) compared with end of pipe chemical destruction treatment. A choice between ultrafiltration and ion exchange will be based on the particular rinse water constituent to be recovered.

Many of the currently common treatment techniques can be modified to meet more stringent regulations. In-plant recovery techniques may be employed, thus reducing flow to the clarifier which increases residence time and improves settling. Polishing with starch xanthate can reduce clarifier pollutant discharge levels significantly. Adaptation of the current clarifier to use the membrane filtration system will produce improved results. All of these approaches allow a plant to make maximum use of the currently installed equipment and by this they reduce the cost impact of the more stringent BAT level limitations.

Typical In-line Treatment System

Based on the preceding review of advanced technology applicability, treatment requirements depend strongly on what plating and metal finishing operations are used by an establishment, and there is no single, universal system. An example of the development of a typical treatment system is therefore presented in this subsection.

The example company, presented in Figure 7-35, employs an automatic copper-nickel-chromium plating line. The plating operations are preceded by an alkaline cleaning section. In addition, there is a rack stripping step. Prior to treatment modifications, the company used two series rinses after each plating operation, and the overflow from each rinse tank was directed to a conventional end-of-pipe treatment system. This conventional system consisted of chromium

TABLE 7-20

IN-LINE TECHNOLOGY APPLICABILITY

Application	Reverse Osmosis	Evaporation	Ion Exchange	Electrolytic Recovery	Ultrafiltration	Membrane Filtration	Advanced Rinsing Techniques
Acid Metal Plating Recovery	X	X	X	X	-	-	X
Cyanide Metal Plating Recovery	-	X	-	X	-	-	X
Precious Metal Plating Recovery	-	X	X	X	-	-	X
Phosphating Recovery	-	-	X	-	X	-	-
Mixed Plating Waste Treatment	X	X	X	-	-	X	-
Electrocoating	-	-	-	-	X	-	-
Etching Recovery	X	X	-	X	-	-	-
Chromating Recovery	-	X	X	-	-	-	-

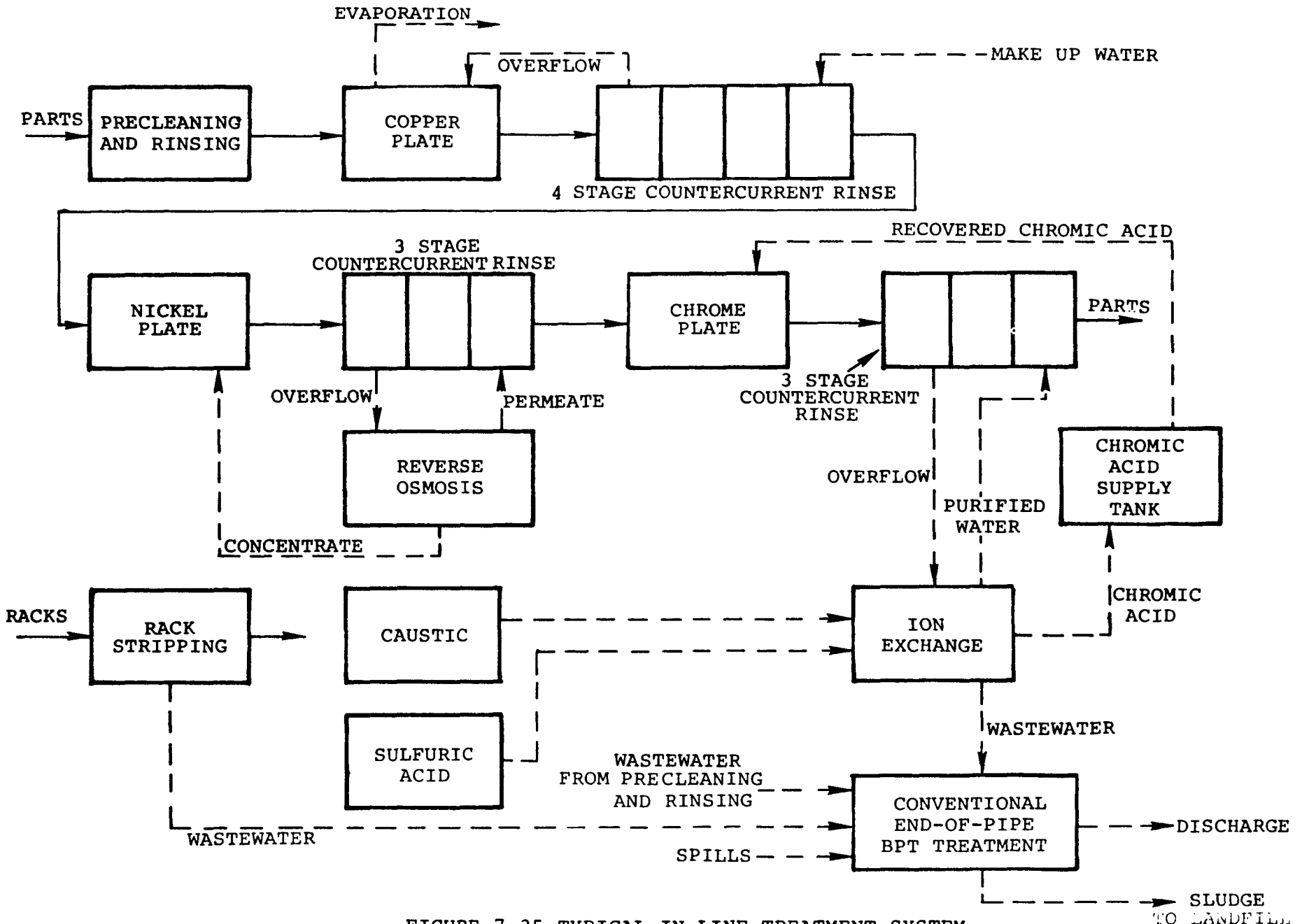

FIGURE 7-35 TYPICAL IN-LINE TREATMENT SYSTEM

reduction, cyanide oxidation, pH adjustment for precipitation, clarification, and final neutralization before discharge.

The first step the company took was a rinse water reduction study. The study showed that replacement of the two-stage series rinses with three-stage countercurrent rinses would reduce the water rate to those rinses by nearly 90 percent. Discussions with a plating line manufacturer determined that each pair of old rinse tanks could easily be replaced with modern three-stage countercurrent rinses, with room to spare. Because of the low flow rates required, the new tanks would be air-agitated to assure adequate mixing. Adjustment of the automatic system to accomodate these changes was also practical.

The projected rinse water changes alone would have resulted in a significant reduction in both water costs and treatment chemical costs for pH adjustment and neutralization. These reductions, however, did not meet company cost reduction objectives. The company therefore decided to install equipment to recover plating chemicals. At first, evaporation appeared to be the only choice for recovery of copper cyanide, but the 160 degrees F operating temperature of the "high efficiency" plating bath suggested that a closed loop rinse with a reasonable number of stages was feasible and would incur much lower capital and operating costs. In fact, calculations showed that for a four-stage rinse, the required rinse water flow rate would just balance evaporative losses from the plating tank. Thus, water should be added to the fourth rinse stage at this required rate, and overflow from the first rinse stage would be returned to the plating bath to replace dragged out plating chemicals and make up for evaporation losses.

Evaporation, ion exchange or reverse osmosis could be used for the nickel plating operation. Evaporation would have resulted in a cost saving, but it was ruled out because of the relatively high energy cost. Spiral wound reverse osmosis and cylic ion exchange were equally competitive from a cost standpoint, but reverse osmosis was finally selected because of its widespread use for nickel salt recovery.

Both evaporative and cyclic ion exchange were investigated for chromic acid recovery. Despite the relative newness of cyclic ion exchange, the company decided to use it because the capital and operating costs for evaporative recovery were much higher.

The cleaning and rack stripping steps were left unchanged, and wastewater from these steps (as well as from spills) continues to be handled by the existing end-of-pipe treatment system. Table 7-21 shows the current pollutant discharge as well as the original pollutant discharge before conversion and the discharge that would have resulted from conversion to countercurrent rinsing only. As

TABLE 7-21

POLLUTANT DISCHARGE AT AN EXAMPLE PLANT

PARAMETER	END-OF-PIPE SYSTEM (mg/l)	END-OF-PIPE SYSTEM (mg/op-m^2)	COUNTERCURRENT RINSING ONLY (mg/l)	COUNTERCURRENT RINSING ONLY (mg/op-m^2)	IN-LINE TREATMENT SYSTEM (mg/l)	IN-LINE TREATMENT SYSTEM (mg/op-m^2)
Chromium	0.54	24	0.61	23	0.02	0.8
Copper	0.49	21	0.56	21	0.02	0.8
Nickel	0.99	43	1.13	43	0.02	7.5
Cyanide	0.01	0.4	0.01	0.4	ND	ND
Fluoride	2.0	87	2.0	76	2.0	75
Total Susp. Solids	15.0	655	16.5	622	16.7	628

Note: ND is Nondetectable

shown in Section VIII, the company achieved a significant cost reduction and concomitantly a drastic reduction in copper, nickel, chromium and cyanide discharge.

END-OF-PIPE TECHNOLOGY FOR PRINTED BOARD MANUFACTURE

The individual treatment technologies discussed in a previous part of this section describe the components available for application in treatment systems for the overall electroplating industry manufacturing wastes. Several combinations of these technologies are used in the treatment systems of the printed board plants surveyed. The systems presented in this subsection represent a range of commonly encountered end-of-pipe systems.

The overall end-of-pipe treatment system for printed board manufacturing shops involves precipitation followed by clarification and ranges from treatment of all process wastes together to segregation of wastes into separate streams and the subsequent individual treatment of each stream. The recommended system is the one that involves segregation and separate treatment of discrete waste streams. The combined waste systems are presented merely to show the range of treatment encountered during the course of this study.

The process flow schematic of a treatment system for printed board manufacturing wastes involving a single waste stream (wastes not segregated) is shown in Figure 7-36. Plant ID 04065 is a printed board manufacturer with a treatment system similar to this type. All of the process wastewater flows into a flocculation tank where chlorine is added for the oxidation of cyanides. Lime is also added to raise the pH for both the cyanide oxidation processes and the precipitation of metals.

The water is pumped to a clarifier for settling out of metals as hydroxides and other solids. After a sufficient retention time the water is discharged. The sludge from the clarifier is hauled away periodically and sent to an on-site landfill or removed by a contractor.

The process flow schematic of the recommended system employing segregation of waste streams for the printed board industry is illustrated in Figure 7-37. A treatment system similar to this type is currently in operation at plant ID's 4069, 17061, and 19063. The waste streams requiring treatment are:

1. Cyanide bearing wastes - This stream is composed of rinses following any operation where cyanides are employed: cyanide copper plating, cyanide gold plating and cyanide gold stripping.

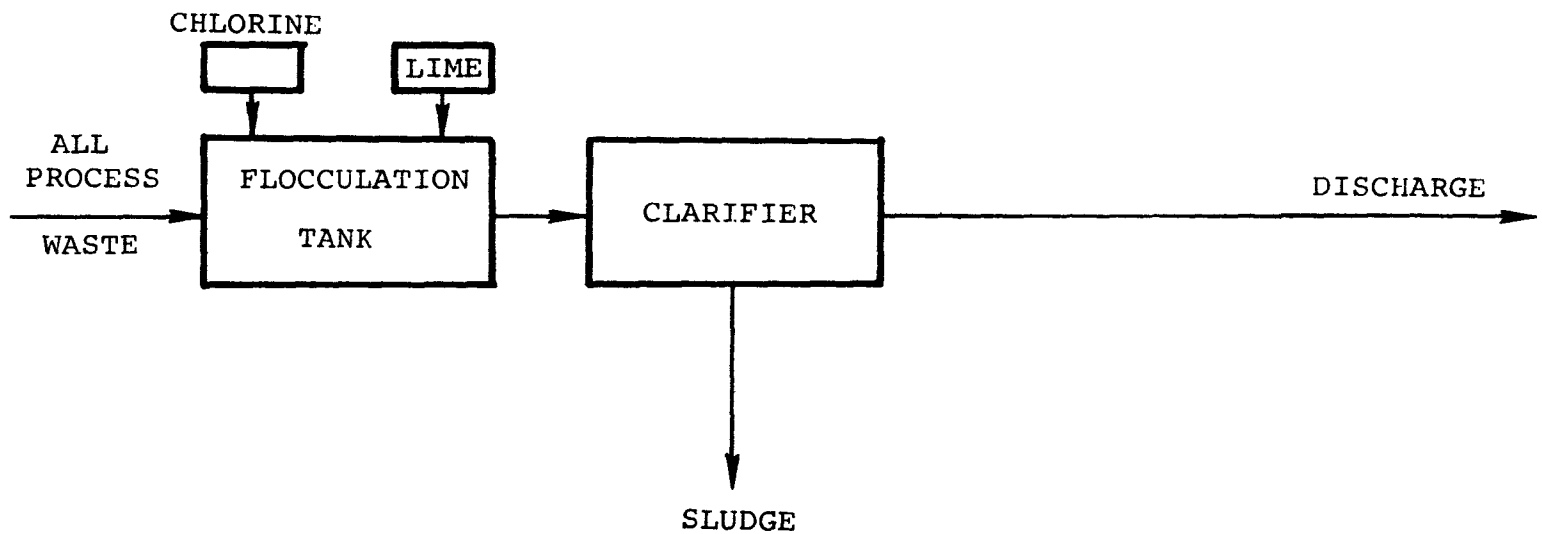

FIGURE 7-36 END-OF-PIPE SYSTEM FOR PRINTED BOARD MANUFACTURERS (SINGLE WASTE STREAM)

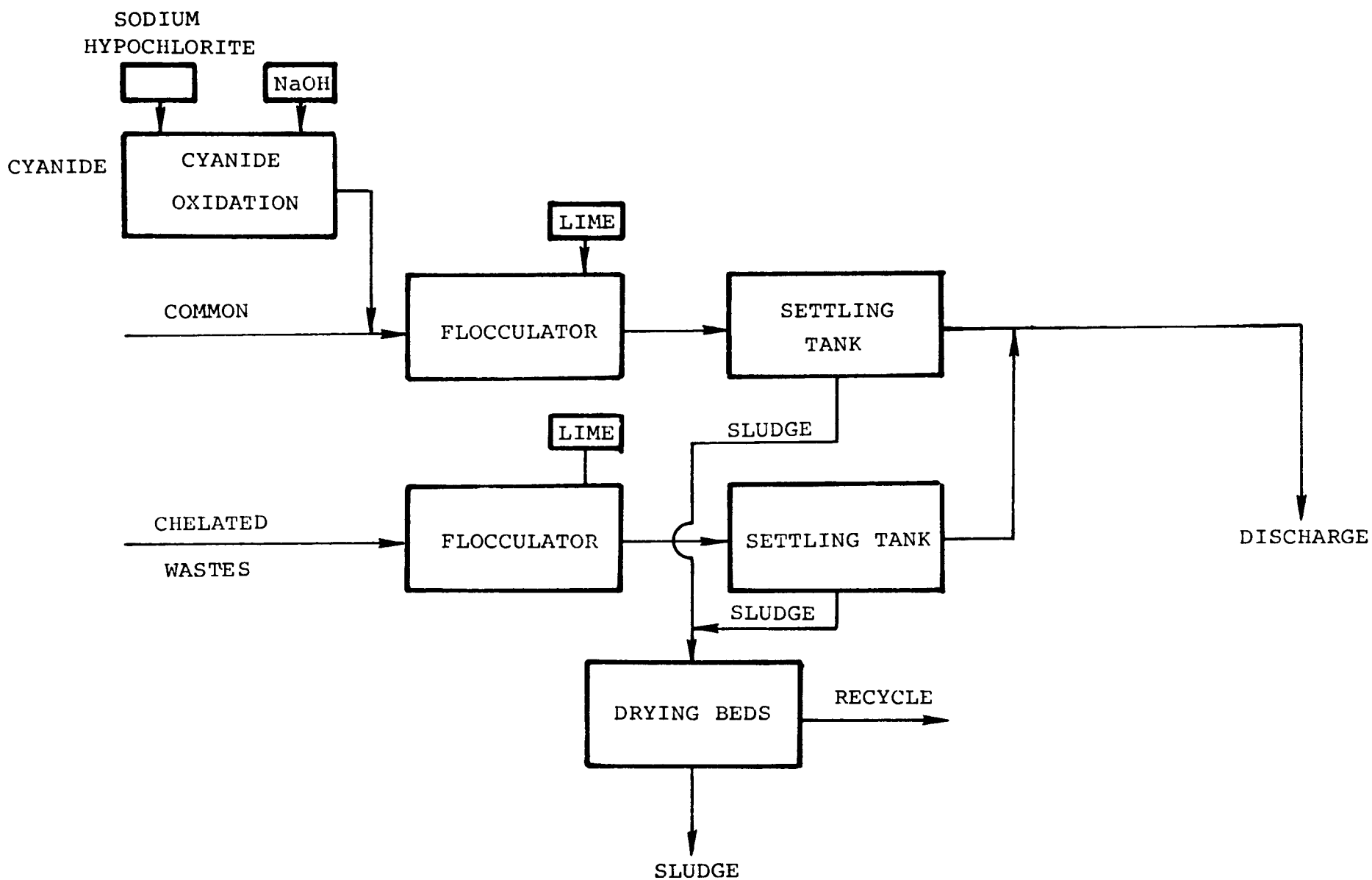

FIGURE 7-37 END-OF-PIPE SYSTEM FOR PRINTED BOARD MANUFACTURERS (SEGREGRATED WASTE STREAMS)

2. Acid-Alkali and non-chelated metals stream - This stream consists of rinse waters following several operations: acid and alkali cleaners in all process lines, non-chromium and non-ammoniated etches, catalyst application, acceleration, non-cyanide and non-chelated plating baths. This stream generally contains metals such as tin, palladium, lead, nickel and copper.

3. Chelated wastes stream - This stream consists of rinses following operations where chelating agents are present. Included in this group are electroless plating rinses. These wastes must be kept separate from other metal bearing wastes.

4. Chromium bearing wastes - This stream contains hexavalent chromium from chromic acid etch rinses if such etching is used. This is usually not found in the printed board industry. However, if such a stream exists, the hexavalent chromium must first be reduced to the trivalent form before being introduced to the flocculation tank. Because of the limited use of chromic acid etches in the printed board industry, the chromium stream is not included in the end-of-pipe treatment system in Figure 7-37.

Referring to Figure 7-37, the wastewaters containing cyanide are isolated for pretreatment and flow into a tank where they are oxidized by the addition of sodium hypochlorite. The chlorine in the hypochlorite oxidizes the cyanides to cyanates, reducing their volatility and toxicity. Sodium hydroxide is also added to maintain the proper pH level (approximately 11) for the reaction. After oxidation, the treated cyanide stream joins the common cleaners and metals stream.

The combined streams (stream 1 & 2) and the chelated waste stream flow in parallel lines through similar treatments. First, they flow into separate flocculation tanks where lime is added for the precipitation of metals, including tin, copper, lead, and palladium. After a forty-five minute retention time, the segregated waste streams pass into separate settling tanks for further precipitation and settling. The retention time in these settling tanks is approximately two hours. This flocculation and settling removes ninety-five to ninety-eight percent of the metals, depending on the type of metals in the waste streams.

Following clarification, the chelated waste stream and the acid-alkali and non-chelated metals streams are mixed together and then discharged. The sludges formed in the flocculating and settling tanks are pumped into one line and sent to a sludge dewatering unit. The dewatered sludge is then disposed of by means of on-site landfill or sent back to the clarifier inlet for further treatment.

If a plant has a significant amount of ammonia in its wastewaters due to the use of ammonia base etchants, the recommmended end-of-pipe system involves segregation of the ammonia stream also. Such a system is illustrated in Figure 7-38 and was seen at plant ID's 4061 and 36062. Using non-ammonia base etchants would be an alternative to segregation of the ammonia stream.

The ammonia waste stream is segregated and sent to a batch treatment tank. When enough water has been collected, caustic is added to raise the pH, and live steam is injected. The effect of these two steps is the precipitation of some metals and the dispersal of ammonia as a gas.

The treated ammonia batch is emptied to a flocculation tank where the acid-alkali and non-chelated stream is also collected. Lime is added to raise the pH and cause metal precipitation. This combined waste stream is then pumped to a settling tank.

After a two hour retention period in the settling tank, the wastewater is pumped through a pressure filter for further removal of metals and other solids. Following filtration, the wastewater enters an equalization tank, from which it can be returned to the settling tank for further treatment or discharged if it is properly treated. The sludge from the settling tank is dewatered and then sent to an on-site landfill or removed by a contractor.

IN-LINE TECHNOLOGY FOR PRINTED BOARD MANUFACTURE

This segment describes the commonly encountered in-line technology for reducing pollution from processes involved with the printed board industry. The technology reduces pollution by reducing the concentration of pollutants, by reducing the quantity of polluted water discharged, by reclaiming valuable potential pollutants for reuse, and by reusing the water itself.

In-line technology reduces the volume of wastewater by use of water conservation techniques such as countercurrent rinsing, fog rinsing, and automatic shut-off equipment for rinse tanks. Use of recovery techniques such as reverse osmosis, distillation, ion exchange, and electrochemical recovery enables a plant to recover plating chemicals and thus reduce pollutant discharge.

Typical in-line treatment systems for wastewaters in the printed board industry are shown in Figures 7-39 and 7-40. An installation which produces boards using the subtractive process was chosen as an example since a large majority of printed boards are made in this fashion. The boards are electroless plated with copper following the necessary cleaning and surface treatment. Then they are successively electroplated with copper and solder. Unwanted copper is then etched

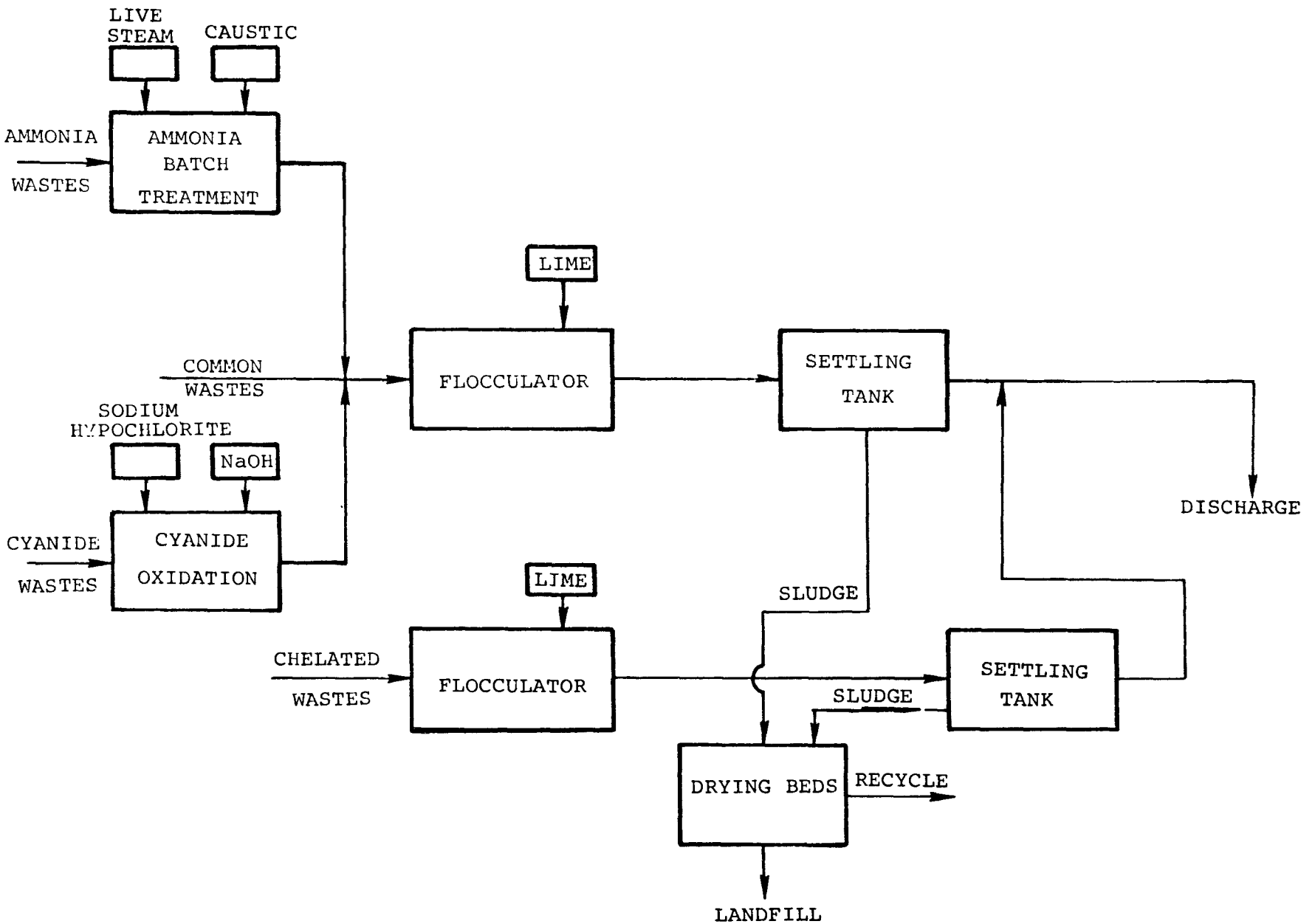

FIGURE 7-38 END-OF-PIPE SYSTEM FOR PRINTED BOARD MANUFACTURERS (FOR AMMONIATED WASTE WATERS)

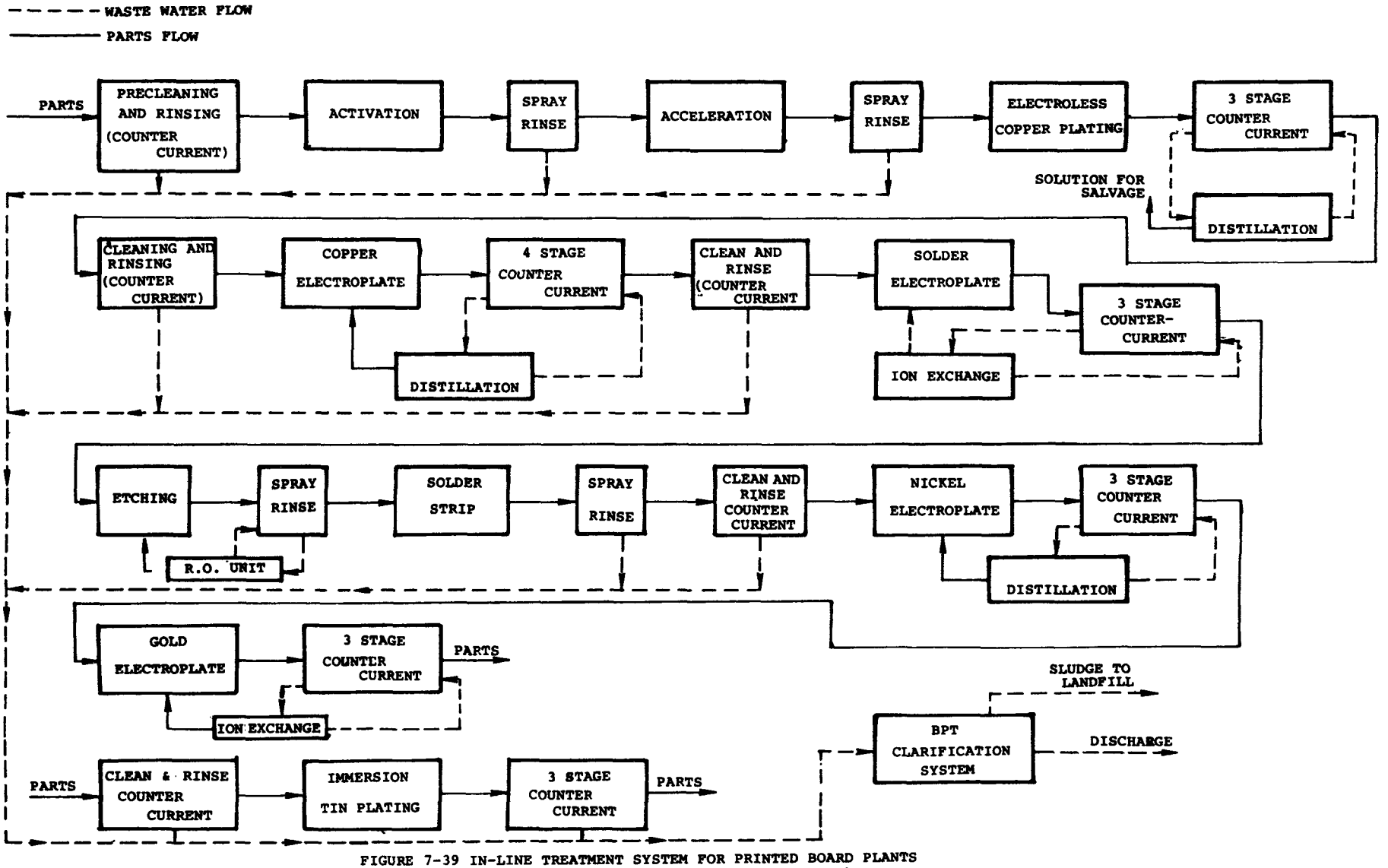

FIGURE 7-39 IN-LINE TREATMENT SYSTEM FOR PRINTED BOARD PLANTS (RECOVERY OF ELECTROLESS PLATING SOLUTION)

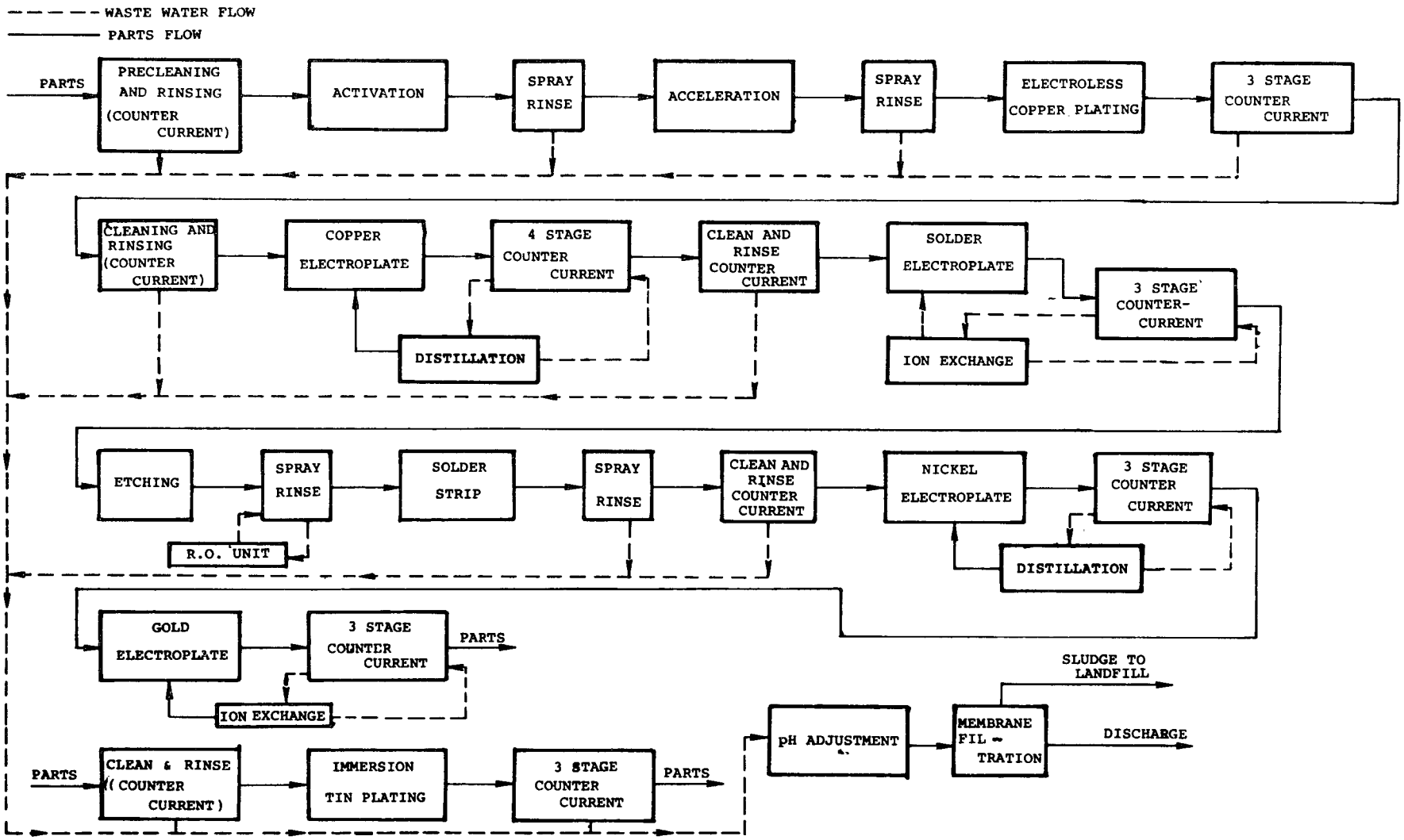

FIGURE 7-40 IN-LINE TREATMENT SYSTEM FOR PRINTED BOARD PLANTS (END-OF-PIPE FILTRATION)

away. Following a solder strip, the tabs of the boards are nickel and gold electroplated. Some of the boards are then immersion tin plated. A process sequence of this sort was found in plant ID's 4065, 4069, 4071, 6065, 17061, and 19063.

The in-line treatment systems for the printed board industry are based upon two principles: reduction of water consumption and the recovery of plating and etching solutions. Reduction of water used can be accomplished by the application of countercurrent rinsing, spray rinsing, and fog rinsing. Wherever applicable, a closed loop rinsing system is best. By cutting back the volume of the water used, end-of-pipe treatment is easier, less expensive, and more efficient.

There are several metal recovery techniques available for both of the treatment systems presented, including reverse osmosis, distillation, ion exchange, electrolytic recovery, and membrane filtration. For copper electroplating, a distillation unit can be utilized with a countercurrent rinse station. Water from the last stage of the rinse goes to the distillation unit; the copper is separated out and returned to the plating solution, and the water is returned to the first station of the countercurrent rinse. If cyanide copper is used, there is an added advantage of distillation treatment. The cyanide is removed from the rinsewater and returned to the solution, thereby eliminating the need for a cyanide oxidation system in the end-of-pipe treatment.

Other electroplating solutions, such as solder, gold, and nickel can be handled in a similar manner, using a recovery system in conjunction with a rinsing system. These recovery units can be distillation units, ion exchange units or reverse osmosis units, depending upon the particular solution to be recovered and economic aspects.

In the system presented in Figure 7-39, there is a recovery unit on the rinse station following the electroless copper operation. This unit, a distillation unit, extracts the plating solution dragout from the rinsewater. The water is returned to the first station of the countercurrent rinse for reuse and the plating solution is stored separately. This plating solution can be broken down and reused if the plant makes up its own baths or it can be sold to a supplier or a scavenger for reuse.

All the wastewater goes to a clarification system similar to the end-of-pipe treatment system. This wastewater undergoes flocculation and settling before discharge. The sludge in this system is periodically collected, dewatered and sent to landfill.

In the system pictured in Figure 7-40, the rinsewaters from the electroless plating operation join all the other wastewaters and are collected in a neutralization tank. Here the water is pH adjusted and

chemicals are added to cause flocculation. This wastewater and the flocculants are pumped through a membrane filtration unit which can effectively handle combined chelated and non-chelated waste streams. The membrane filtration unit removes sufficient amounts of metals and solids to allow discharge of the treated water. The sludge from the unit is collected and sent to on-site landfill or hauled away by a contractor.

There is another recovery technique which can be employed in a printed board plant which has both additive and subtractive production methods. This involves use of spent etchant from the subtractive facility as plating bath make-up for additive plating. This technique solves two problems: spent etchant disposal and the need for a high purity copper salt for use in the electroless copper bath used in an additive process. Printed board plant ID's 11065 and 30525 employ such a system.

SECTION VIII

COST OF WASTEWATER CONTROL AND TREATMENT

INTRODUCTION

This section presents the cost of implementing the major rinse and treatment technologies described in Section VII. These rinse and treatment costs as well as the costs of entire systems representing conventional end-of-pipe treatment and in-line treatment and recovery were determined by developing system costing logic and utilizing a computer system for the required cost calculations. A discussion is also presented to show that investment in rinse and treatment techniques designed to recover plating solutions can result in significant reductions in plant investment and operating costs. In addition, the description of each control and treatment technology presented in Section VII is extended to define non-water characteristics. These nonwater characteristics include energy requirements and an indication of the degree to which the technology impacts air pollution, noise pollution, solid waste, and radiation.

COST ESTIMATES

Cost correlations and estimates are presented for individual waste treatment and rinse technologies and for typical wastewater treatment systems. Cost breakdown factors used in preparing these estimates are discussed, assumptions are listed, system cost computations are reviewed, and the computer techniques used are summarized.

The basic cost data came from a number of primary sources. Some of the data were obtained during on-site surveys. Other data were obtained through discussions with waste treatment equipment manufacturers. Another block of data was derived from previous EPA projects which utilized data from engineering firms experienced in the installation of waste treatment systems.

Technology Cost Estimates

Table 8-1 presents the list of individual wastewater treatment and rinse technologies used in the electroplating industry. The individual process costs for these technologies are presented in Tables 8-2 through 8-24. These costs represent only the individual process costs and do not include the subsidiary costs associated with system construction. Therefore, addition of various process costs as presented in Tables 8-2 through 8-24 to model a complete treatment system will not yield an accurate treatment system cost estimate.

TABLE 8-1

INDEX TO TECHNOLOGY COST TABLES

Table	Waste Treatment or Rinse Technology
8-2	Countercurrent Rinse (for other than Recovery of Evaporative Plating Loss)
8-3	Countercurrent Rinse Used for Recovery of Evaporative Plating Loss
8-4	Spray Rinse Used for Recovery of Evaporative Plating Loss
8-5	Still Rinse Used for Recovery of Evaporative Plating Loss
8-6	Clarification - Settling Tank; Continuous Treatment
8-7	Clarification - Settling Tank; Batch Treatment
8-8	Chromium Reduction - Continuous Treatment
8-9	Chromium Reduction - Batch Treatment
8-10	Cyanide Oxidation - Continuous Treatment
8-11	Cyanide Oxidation - Batch Treatment
8-12	pH Adjustment
8-13	Diatomaceous Earth Filtration
8-14	Submerged Tube Evaporation - Single Effect
8-15	Submerged Tube Evaporation - Double Effect
8-16	Climbing Film Evaporation
8-17	Atmospheric Evaporation
8-18	Flash Evaporation
8-19	Ultrafiltration
8-20	Membrane Filtration

TABLE 8-1 (cont.)

8-21	Ion Exchange - In-Plant Regeneration
8-22	Ion Exchange - Service Regeneration
8-23	Cyclic Ion Exchange
8-24	Reverse Osmosis

In general, the tables show costs for investment, total annual cost, depreciation, cost of capital, operation and maintenance (less energy and power), and energy and power. These costs are defined under the subheadings to follow. Not all of these costs pertain to all technologies. Energy costs are often negligible, and some techniques such as rinsing have no maintenance costs beyond what is already required for the plating line.

Investment - Investment is the capital expenditure required to bring the technology into operation. If the installation is a package contract, the investment is the purchase price of the installed equipment. Otherwise, it includes the equipment cost, cost of freight, insurance and taxes, and installation costs.

Total Annual Cost - Total annual cost is the sum of annual costs for depreciation, capital, operation and maintenance (less energy and power) and energy and power (as a separate function).

Depreciation - Depreciation is an allowance, based on tax regulations, for the recovery of fixed capital from an investment to be considered as a noncash annual expense. It may be regarded as the decline in value of a capital asset due to wear and obsolescence.

Capital - The annual cost of capital is the cost, to the plant, of obtaining capital, expressed as an interest rate. It is equal to the capital recovery cost (see the following section on cost factors) less depreciation.

Operation and Maintenance - Operation and maintenance cost is the annual cost of running the wastewater treatment or rinse equipment. It includes labor and materials such as waste treatment chemicals. As presented on the tables, operation and maintenance cost does not include energy (power or fuel) costs because these costs are shown separately.

Energy and Power - The annual cost of power and fuel is shown separately, although it is commonly included as part of operation and maintenance cost. Energy and power cost has been shown separately because of its importance to the nation's economy.

Technology Costs and Assumptions

Specific cost data were generalized to obtain the cost correlations by means of certain assumptions. Correlations were then verified by checking them against independent sets of cost data. The specific assumptions for each wastewater treatment process and rinse technique are listed under the subheadings to follow. Costs are presented as a function of process influent water flow rate except where noted differently in the process assumptions. For all rinse techniques, a

programmed hoist operation was assumed, and line conversion costs were included. For operations of the cycle elevator conveyor type, line conversion costs to incorporate rinse techniques are approximately 10 times the conversion cost of programmed hoist operations.

Single Stage Running Rinse - The costs of single stage running rinses are discussed below. Costing assumptions are:

A. Unit cost is based on one open top stainless steel tank with a depth of 1.22 meters (4 feet), length of 1.22 meters (4 feet), and width of 0.91 meters (3 feet). Investment cost includes all water and air piping, a blower for agitation, and conversion costs for programmed hoist operation.

B. Operation and maintenance costs include an electrical charge for the blowers based on a capacity of 1,219 liters/min/sq. meter of tank surface area (4 cfm/sq. ft.) at a discharge pressure of 1,538 kg/sq. meter of tank depth (1 psi/18 in.). Fan efficiency is assumed to be 60 percent. A rinse water charge is also included. Rinse maintenance charges are assumed to be negligible when compared to normal plating line maintenance and are ignored.

For a dragin flow rate (i.e., plating tank dragout flow rate) of 22 liters/hour and a rinse ratio (plating solution concentration/final rinse effluent concentration) of 363, the following typical costs are incurred:

Investment ($)	3,505
Cost of Capital ($/Year)	224
Depreciation ($/Year)	701
Operation and Maintenance (Less Energy and Power) ($/Year)	2,156
Energy and Power ($/Year)	126
Total Annual Cost ($/Year)	3,206

Countercurrent Rinse - The costs of countercurrent rinsing without using the first stage for evaporative loss recovery are presented in Table 8-2 as a function of the number of rinse tanks utilized. Costing assumptions are:

A. Unit cost is based on open top stainless steel tanks with a depth of 1.22 meters (4 feet), length of 1.22 meters (4 feet), and width of 0.91 meters (3 feet). Investment cost

includes all water and air piping, a blower on each rinse tank for agitation, and programmed hoist line conversions.

B. Operation and maintainance costs include a cost for electricity for the blowers based on a capacity of 1,219 liters/min./sq. meter of tank surface area (4 cfm/sq. ft.) at a discharge pressure of 1,538 kg/sq. meter/meter of tank depth (1 psi/18 in.). Fan efficiency is assumed to be 60 percent. A water charge based on a rinse ratio of 8,180 is also included. Rinse maintenance charges are assumed to be negligible when compared to normal plating line maintenance and are ignored.

Countercurrent Rinse Used for Recovery of Evaporative Plating Loss - The costs of countercurrent rinsing with a rinse flow rate sufficient to replace plating tank evaporative losses are presented in Table 8-3. The results are tabulated for various evaporative rates which are equal to the rinse water flow rates. Costing assumptions are:

A. Unit cost is based on a sufficient number of rinse stages to replace the evaporative loss from a plating bath at approximately 60 degrees C while also maintaining a rinse ratio of 8,180.

B. Investment costs include open top stainless steel tanks with a depth of 0.91 meters (3 feet), length of 1.22 meters (4 feet), and width of 1.22 meters (4 feet). All water and air piping, a blower on each rinse tank for agitation, a liquid level controller, solenoid, and pump are also included in the investment cost. Operation is assumed to be programmed hoist and line conversion costs are included.

C. Operation and maintenance costs include a cost for electricity for the blowers based on a capacity of 1,219 liters/min/sq. meter of tank surface area (4 cfm/sq. ft.) at a discharge pressure of 1,538 kg/sq. meter/meter of tank depth (1 psi/18 in.). A fan efficiency of 60 percent is assumed. A water charge is also included. Rinse maintenance charges are assumed to be negligible when compared to normal plating line maintenance and are ignored.

Spray Rinse - The costs of spray rinsing with a rinse flow rate sufficient to replace plating tank evaporative losses are presented in Table 8-4 as a function of the plating tank evaporative loss which is equal to the rinse water flow rate. Costing assumptions are:

A. Unit cost is based on one open top stainless steel tank with a depth of 0.91 meters (3 feet), length of 1.22 meters (4 feet), and width of 1.22 meters (4 feet) with 6 spray

TABLE 8-2

COUNTERCURRENT RINSE (FOR OTHER THAN RECOVERY OF EVAPORATIVE PLATING LOSS)

Number of Rinse Tanks	3	4	5
Investment	$8,203	$10,553	$12,902
Annual Costs:			
Capital Cost	523	673	823
Depreciation	1,641	2,111	2,580
Operation & Maintenance Costs (Excluding Energy & Power Costs)	20	9	6
Energy & Power Costs	377	503	628
Total Annual Cost	$2,561	$ 3,296	$ 4,038

TABLE 8-3

COUNTERCURRENT RINSE USED FOR RECOVERY OF

EVAPORATIVE PLATING LOSS

Evaporative Rate (Liters/Hr)	15.3	24.0	50.8
Investment	$13,753	$11,352	$ 8,951
Annual Costs:			
Capital Costs	877	724	571
Depreciation	2,751	2,270	1,790
Operation & Maintenance Costs (Excluding Energy & Power Costs)	4	6	14
Energy & Power Costs	628	503	377
Total Annual Cost	$ 4,261	$ 3,504	$ 2,752

Note: Savings due to recovery of plating solution are not presented in this table.

TABLE 8-4

SPRAY RINSE USED FOR RECOVERY OF

EVAPORATIVE PLATING LOSS

Evaporative Rate (Liters/Hr)	60.8	101.3	135.0
Investment	$ 3,472	$ 3,472	$ 3,472
Annual Costs:			
Capital Costs	221	221	221
Depreciation	694	694	694
Operation & Maintenance Costs (Excluding Energy & Power Costs)	16	27	36
Energy & Power Costs	0	0	0
Total Annual Cost	$ 932	$ 943	$ 952

Note: Savings due to recovery of plating solution are not presented in this table.

nozzles. Investment cost includes the tank, spray nozzles, conductivity meter controller, pump, solenoid, piping, and conversion of programmed hoist operation.

B. Operation and maintenance cost is the rinse water charge based on replacing the plating tank evaporative losses. A combined spray efficiency of 50 percent is assumed. The combined spray efficiency accounts for the amount of spray water hitting the part and the amount of the part that can be hit by the spray. Power, filter replacement, and maintenance costs are negligible when compared to normal plating line operation and maintenance and are ignored.

For spray rinsing without evaporative recovery, the only variation in unit cost for various dragin flow rates is a variation in the rinse water charge. Items included in non-recovery spray rinsing investment costs are identical to those items included in recovery spray rinsing except that the pump is omitted.

For a dragin flow rate of 15.1 liters/hour, rinse ratio of 8,108, spray efficiency of 50 percent, and tank dimensions of 1.22 meters (4 feet) by 1.22 meters (4 feet) by 0.91 meters (3 feet), the following costs are typical:

Investment ($)	3,350
Cost of Capital ($/Year)	214
Depreciation ($/Year)	670
Operation and Maintenance (Less Energy & Power) ($/Year)	73
Energy and Power ($/Year)	0
Total Annual Costs ($/Year)	957

Still Rinse - The costs of still rinsing with a return from the rinse tank sufficient to replace plating tank evaporative losses are presented in Table 8-5 as a function of the plating tank evaporative rate. Costing assumptions are:

A. Unit cost is based on one open top stainless steel tank with a depth of 0.91 meters (3 feet), length of 1.07 meters (3.5 feet), and width of 1.07 meters (3.5 feet) with 1,041 liter capacity. Investment cost includes the tank, liquid level controller, pump, and conversion of programmed hoist operation.

TABLE 8-5

STILL RINSE USED FOR RECOVERY OF

EVAPORATIVE PLATING LOSS

Evaporative Rate (Liters/Hr)	29.7	59.5	99.1
Investment	$ 2,971	$ 2,971	$ 2,971
Annual Costs:			
Capital Costs	190	190	190
Depreciation	594	594	594
Operation & Maintenance Costs (Excluding Energy & Power Costs)	8	16	27
Energy & Power Costs	0	0	0
Total Annual Costs	$ 792	$ 800	$ 810

Note: Savings due to recovery of plating solution are not presented in this table.

B. The operation and maintenance cost is the rinse water charge based on replacing the plating tank evaporative losses and maintaining the effluent rinse concentration less than or equal to 30 percent of the influent concentration (i.e., plating tank dragout). The still rinse tank is assumed to be hose filled and dumped to the plating tank. Maintenance and power costs are negligible when compared to normal plating line maintenance and power costs and are ignored.

For still rinsing without evaporative recovery, only the cost of the tank and conversion of programmed hoist operation are included in the investment cost. The only variation in costs for various dragin flow rates is a variation in the rinse water charge. For a dragin flow rate of 36 liters/hour (55.2 square meters of various shaped parts plated per hour) and tank dimensions of 1.22 meters (4 feet) by 1.22 meters (4 feet) by 0.91 meters (3 feet), the following costs are typical:

Investment ($)	2,907
Cost of Capital ($/Year)	185
Depreciation ($/Year)	581
Operation & Maintenance (Less Energy & Power) ($/Year)	27
Energy & Power ($/Year)	0
Total Annual Costs	794

Clarification - Settling Tank - Settling tank clarification costs are presented for continuous treatment in Table 8-6 and for batch treatment in Table 8-7. Costing assumptions are:

A. For continuous clarification with an influent flow rate greater than or equal to 9857 liters per hour (2600 gallons/hour), costs include a concrete flocculator and its excavation, a concrete settling tank with skimmer and its excavation, and two centrifugal sludge pumps. For continuous clarification with influent flows less than 9857 liters/hour (2600 gallons/hour), costs include two above ground conical unlined carbon steel tanks and two centrifugal sludge pumps.

B. The flocculator size is based on a 45 minute retention time, a length to width ratio of 5, a depth of 2.44 meters (8 feet), a thickness of 0.305 meters (1 foot), and an excess

TABLE

CLARIFICATION-CONTIN[illegible]

Flow Rate (Liters/Hr)	[illegible]	[illegible]
Investment	$7[illegible]	[illegible]
Annual Costs:		
Capital Costs	4 [illegible]	[illegible]
Depreciation	[illegible]	[illegible]
Operation & Maintenance Costs (Excluding Energy & Power Costs)	2,50[illegible]	[illegible]
Energy & Power Costs	[illegible]	[illegible]
Total Annual Cost	$2[illegible],[illegible]	[illegible]

TABLE [illegible]

CLARIFICATION-BATCH TPU

Flow Rate (Liters/Hr)	1,85[illegible]	[illegible]
Investment	$25,55[illegible]	[illegible]
Annual Costs:		
Capital Costs	1,6[illegible]	[illegible]
Depreciation	5,[illegible]	
Operation & Maintenance Costs (Excluding Energy & Power Costs)	3,[illegible]	
Energy & Power Costs	[illegible]	
Total Annual Cost	$ 9,[illegible]	[illegible]

capacity factor of 1.2. A mixer is included in the flocculator.

C. The settling tank is sized for a hydraulic loading of 1356.7 liters/hour per square meter (33.3 gallons/hour/ sq. ft.), a 4 hour retention time, and an excess capacity factor of 1.2.

D. The two conical unlined carbon steel tanks are designed for a 4 hour retention time in each tank.

E. The sludge pumps are assumed operational one hour for each 12 hours of production and have 20 percent excess pumping capacity. Costs include motors, starters, alternators, and necessary piping.

F. Lime and sodium sulfide are added for metal and solids removal. All power requirements are based on data from a major manufacturer.

G. For batch clarification, the dual centrifugal sludge pumps and the chemical demands are identical to continuous clarification. However, the flocculator and settling tank are replaced with dual above ground cylindrical carbon steel tanks.

H. Each tank is sized by an 8 hour retention time and an excess capacity factor of 1.2. Each tank has a mixer that operates 1 hour for each 8 hours that the tank is being used.

I. Manpower estimates for operation and maintenance reflect the varying schemes for continuous and batch treatment.

Chromium Reduction - Chromium reduction costs are presented in Table 8-8 for continuous treatment and in Table 8-9 for batch treatment. Costing assumptions are:

A. For both continuous and batch treatment, sulfuric acid is added for pH control. A 90 day supply is stored in the 25 percent aqueous form in an above-ground, covered concrete tank, 0.305 meters (1 foot) thick.

B. For continuous chromium reduction, the single chromium reduction tank is sized as an above-ground cylindrical concrete tank with a 0.305 meter (1 foot) wall thickness, a 45 minute retention time, and an excess capacity factor of 1.2. Sulfur dioxide is added to convert the influent hexavalent chromium to the trivalent form.

TABLE 8-8

CHROMIUM REDUCTION - CONTINUOUS TREATMENT

Flow Rate (Liters/Hr)	3,785	7,570	18,925
Investment	$20,416	$21,538	$24,003
Annual Costs:			
Capital Costs	1,303	1,374	1,531
Depreciation	4,083	4,308	4,801
Operation & Maintenance Costs (Excluding Energy & Power Costs)	1,086	1,375	2,089
Energy & Power Costs	256	256	256
Total Annual Cost	$ 6,728	$ 7,313	$ 8,677

TABLE 8-9

CHROMIUM REDUCTION - BATCH TREATMENT

Flow Rate (liters/Hr)	189	379	1,893
Investment	$8,493	$9,535	$14,405
Annual Costs:			
Capital Costs	541	608	919
Depreciation	1,699	1,907	2,881
Operation & Maintenance Costs (Excluding Energy & Power Costs)	155	295	1,415
Energy & Power Costs	256	256	256
Total Annual Cost	$2,651	$3,066	$ 5,471

C. The control system for continuous chromium reduction consists of:

1 immersion pH probe and transmitter

1 immersion ORP probe and transmitter

1 pH and ORP monitor

2 slow process controllers

1 sulfonator and associated pressure regulator

1 sulfuric acid pump

1 transfer pump for sulfur dioxide ejector

2 maintenance kits for electrodes, and miscellaneous electrical equipment and piping.

D. For batch chromium reduction, the dual chromium reduction tanks are sized as above-ground cylindrical concrete tanks, 0.305 meters (1 foot) thick, with a 4 hour retention time, and an excess capacity factor of 1.2. Sodium bisulfite is added to reduce the hexavalent chromium.

E. A completely manual system is provided for batch operation. Subsidiary equipment includes:

1 sodium bisulfite mixing and feed tank

1 metal stand and agitator collector

1 sodium bisulfite mixer with disconnects

1 sulfuric acid pump

1 sulfuric acid mixer with disconnects

2 immersion pH probes

1 pH monitor, and miscellaneous piping.

F. Manpower estimates for operation and maintenance reflect the varying schemes for continuous and batch operation.

G. A constant power requirement of 2 horsepower is assumed for chemical mixing.

For very small plating establishments, treatment may also be accomplished with a completely manual system. With this approach, flat bottom, open top, standard resin fiberglass tanks hold the daily flow and chemicals are added manually at the end of each shift.

Equipment costs range from $329 to $5,100 for daily flow rates from 1,893 to 37,850 liters per day.

Cyanide Oxidation - Cyanide oxidation costs are shown in Table 8-10 for continuous treatment and in Table 8-11 for batch treatment. Costing assumptions are:

A. For both continuous and batch treatment, the cyanide oxidation tank is sized as an above ground cylindrical tank with a retention time of 4 hours based on the process flow. Cyanide oxidation is normally done on a batch basis; therefore, two identical tanks are employed.

B. Cyanide removal is accomplished by the addition of sodium hypochlorite. Sodium hydroxide is added to maintain the proper pH level. A 60 day supply of sodium hypochlorite is stored in an in-ground covered concrete tank, 0.305 meters (1 foot) thick. A 90 day supply of sodium hydroxide is also stored in an in-ground covered concrete tank, 0.305 meters (1 foot) thick.

C. Mixer power requirements for both continuous and batch treatment are based on 2 horsepower for every 3,000 gallons of tank volume. The mixer is assumed to be operational 25 percent of the time that the treatment system is operating.

D. A continuous control system is costed for the continuous treatment alternative. This system includes:

- 2 immersion pH probes and transmitters
- 2 immersion ORP probes and transmitters
- 2 pH and ORP monitors
- 2 2-pen recorders
- 2 slow process controllers
- 2 proportional sodium hypochlorite pumps
- 2 proportional sodium hydroxide pumps
- 2 mixers
- 3 transfer pumps
- 1 maintenance kit
- 2 liquid level controllers and alarms, and miscellaneous electrical equipment and piping.

TABLE 8-10

CYANIDE OXIDATION - CONTINUOUS TREATMENT

Flow Rate (Liters/Hr)	3,785	5,678	7,570
Investment	$47,808	$51,875	$55,556
Annual Costs:			
Capital Costs	3,050	3,310	3,544
Depreciation	9,561	10,395	11,111
Operation & Maintenance Costs (Excluding Energy & Power Costs)	2,218	2,750	3,563
Energy & Power Costs	90	135	180
Total Annual Cost	$14,920	$16,570	$18,098

TABLE 8-11

CYANIDE OXIDATION - BATCH TREATMENT

Flow Rate (Liters/Hr)	189	757	1,893
Investment	$10,325	$13,258	$17,069
Annual Costs:			
Capital Costs	659	846	1,089
Depreciation	2,065	2,652	3,414
Operation & Maintenance Costs (Excluding Energy & Power Costs)	464	1,854	4,636
Energy & Power Costs	5	18	45
Total Annual Cost	$ 3,192	$ 5,370	$ 9,184

E. A complete manual control system is costed for the batch treatment alternative. This system includes:

- 2 pH probes and monitors
- 1 mixer
- 1 liquid level controller and horn
- 1 proportional sodium hypochlorite pump
- 1 on-off sodium hydroxide pump and PVC piping from the chemical storage tanks.

F. Manpower estimates for operation and maintenance reflect the varying schemes for continuous and batch operation.

For very small plating establishments, a completely manual treatment system may be used. This system consists of flat bottom, open top, standard resin fiberglass tanks that hold the daily flow. Chemicals are added manually at the end of each shift. For daily flow rates of 1,893 to 37,850 liters per day, equipment costs range from $329 to $5,100.

pH Adjustment - pH adjustment costs are presented in Table 8-12. Costing assumptions are:

A. The pH adjustment tank is an in-ground concrete tank with a 45 minute retention time. The tank has a length to width ratio of 5, a depth of 2.44 meters (8 feet), a thickness of 0.305 meters (1 foot), and an excess capacity factor of 1.2. A mixer and tank excavation are included in the costs.

B. Lime is added to obtain the desired effluent pH. Mixer power is based on a representative installation with 1 turnover per minute.

Diatomaceous Earth Filtration - Diatomaceous earth filtration costs are presented in Table 8-13. Costing assumptions are:

A. Unit cost is based on one filter station comprised of one filter, one mix tank, two pumps, and associated valving. The unit is shut down one hour each day of operation for cleaning and filter precoating.

B. Diatomaceous earth addition rates, power requirements, and manpower requirements are based on manufacturer's data.

Submerged Tube Evaporation - Submerged tube evaporation costs are shown for single effect units in Table 8-14 and for double effect units in Table 8-15. Costing assumptions are:

TABLE 8-12

pH ADJUSTMENT

	Flow Rate		
Flow Rate (Liters/Hr)	492	4,921	49,205
Investment	$1,452	$4,921	$18,855
Annual Costs:			
Capital Costs	93	314	$ 1,203
Depreciation	290	984	3,771
Operation & Maintenance Costs (Excluding Energy & Power Costs)	286	1,036	3,758
Energy & Power Costs	8	79	1,503
Total Annual Cost	$ 677	$2,413	$10,315

TABLE 8-13

DIATOMACEOUS EARTH FILTRATION

Flow Rate (Liters/Hr)	189	4,731	47,313
Investment	$8,823	$27,707	$62,819
Annual Costs:			
Capital Costs	563	1,768	4,008
Depreciation	1,765	5,541	12,564
Operation & Maintenance Costs (Excluding Energy & Power Costs)	3,936	6,046	29,872
Energy & Power Costs	22	302	1,970
Total Annual Costs	$6,286	$13,657	$48,414

TABLE 8-14

SUBMERGED TUBE EVAPORATION - SINGLE EFFECT

Flow Rate (Liters/Hr)	95	379	757
Investment	$11,156	$23,486	$34,077
Annual Costs:			
Capital Costs	712	1,498	2,174
Depreciation	2,231	4,697	6,815
Operation & Maintenance Costs (Excluding Energy & Power Costs)	1,678	6,713	13,427
Energy & Power Costs	6,048	20,117	37,815
Total Annual Cost	$10,669	$33,026	$60,231

TABLE 8-15

SUBMERGED TUBE EVAPORATION - DOUBLE EFFECT

Flow Rate (Liters/Hr)	189	568	1,136
Investment	$19,424	$35,039	$50,841
Annual Costs:			
Capital Costs	1,239	2,235	3,244
Depreciation	3,885	7,008	10,168
Operation & Maintenance Costs (Excluding Energy & Power Costs)	1,678	5,035	10,070
Energy & Power Costs	6,048	15,844	29,270
Total Annual Costs	$12,850	$30,123	$52,752

A. Unit size, power requirements, and operational expenses (less energy and power) are based on data supplied by the manufacturer for standard size units.

B. Investment cost includes the basic evaporator and bath purification device.

C. Evaporative heat of 583 cal/gram of wastewater is required for single effect units, and 292 cal/gram is required for double effect units. The heating value of fuel is assumed to be 10,140 cal/gram (Lower Heating Value (LHV), API of 30) with a heat recovery of 85 percent.

D. A cooling water charge is not included in the operation and maintenance cost. A cooling water circuit is assumed to already exist for the plant.

E. The condensate is assumed to be pure with the percentage of condensate and concentrate flow split based on the manufacturer's operational manual.

Climbing Film Evaporation - Climbing film evaporation costs are presented in Table 8-16. Costing assumptions are:

A. Unit sizes and costs are based on data supplied by the manufacturer for unit capacities of 114 to 284 liters/hour. Multiple units are used as needed.

B. Investment cost includes the basic evaporator and a bath purification device.

C. Evaporative heat of 583 cal/gram of wastewater is required. The heating value of fuel is assumed to be 10,140 cal/gram (LHV, API of 30) with a heat recovery of 85 percent.

D. The electrical requirement is based on three pump horsepower per evaporation unit.

E. A cooling water charge is not included. A cooling water circuit is assumed to already exist for the plant.

F. The condensate is assumed to be pure.

Atmospheric Evaporation - Atmospheric evaporation costs are presented in Table 8-17. Costing assumptions are:

A. Unit sizes are based on data supplied by the manufacturer for standard unit capacities of 379 to 3,407 liters/hr. Two units provide a capacity to 6,814 liters per hour, maximum.

B. Investment costs include the basic evaporator with mid-range corrosion protection applied to the equipment and with bath purification.

TABLE 8-16

CLIMBING FILM EVAPORATION

Flow Rate (Liters/Hr)	114	795	4,731
Investment	$27,559	$104,470	$600,090
Annual Costs:			
Capital Costs	1,758	6,665	38,285
Depreciation	5,512	20,894	120,018
Operation & Maintenance Costs (Excluding Energy & Power Costs)	0	0	0
Energy & Power Costs	5,533	37,106	220,522
Total Annual Cost	$12,803	$ 64,665	$378,825

TABLE 8-17

ATMOSPHERIC EVAPORATION

Flow Rate (Liters/Hr)	379	1,893	6,813
Investment	$20,430	$45,967	$143,008
Annual Costs:			
Capital Costs	1,303	2,933	9,124
Depreciation	4,086	9,193	28,602
Operation & Maintenance Costs (Excluding Energy & Power Costs)	155	155	155
Energy & Power Costs	18,443	92,213	331,968
Total Annual Cost	$23,987	$104,494	$369,848

C. Evaporative heat of 583 cal/gram of wastewater is required. The heating value of fuel is assumed to be 10,140 cal/gram (LHV, API of 30) with a heat recovery of 85 percent.

D. The electrical requirement is based on a fan system power requirement of 10 horsepower per 379 liters per hour.

E. A cooling water circuit is assumed to already exist for the plant, and the cost of cooling water is not included.

F. The condensate is assumed to be pure.

Flash Evaporation - The costs for flash evaporation are presented in Table 8-18. Costing assumptions are:

A. Unit cost is based on a chromic acid influent requiring fiberglass vessels and tantalum heat exchangers. Investment cost includes the basic evaporator and bath purification and is based on data supplied by the manufacturer.

B. Operation and maintenance cost includes the fuel requirements for the evaporator and electrical requirements for the pumps.

C. Evaporative heat of 583 cal/gram of wastewater is required. The fuel requirements are based on a heating value of 10,140 cal/gram (LHV, API of 30) and a heat recovery of 85 percent.

D. The electrical requirement is based on a constant six kilowatts for the pumps.

E. A cooling water circuit is assumed to already exist for the plant, and the cost of cooling water is not included.

F. The condensate is assumed to be pure.

Evaporative Cost Comparison - Figure 8-1 presents, for comparison purposes, the relative investment cost of the four different types of evaporation studied. Figure 8-2 presents the relative total annual costs for these evaporation processes. These costs are based on the various manufacturers' standard equipment sizes.

Ultrafiltration - Ultrafiltration costs are presented in Table 8-19. Costing assumptions are:

A. The unit is sized by a hydraulic loading of 1,430 liters per day per square meter of surface area and an excess capacity factor of 1.2.

B. Power is based on 30.48 meters of pump head from the equation

$$HP = \text{meters} \times \text{specific gravity} \times (\text{liters/min recirc}) / (3{,}960 \times 0.7)$$

TABLE 8-18

FLASH EVAPORATION

Flow Rate (Liters/Hr)	189	568	1,136
Investment	$46,207	$62,987	$76,585
Annual Costs:			
Capital Costs	2,948	4,018	4,886
Depreciation	9,241	12,597	15,317
Operation & Maintenance Costs (Excluding Energy & Power Costs)	0	0	0
Energy & Power Costs	9,559	26,649	52,284
Total Annual Costs	$21,749	$43,265	$72,487

TABLE 8-19

ULTRAFILTRATION

Flow Rate (Liters/Hr)	95	4,731	9,463
Investment	$9,843	$189,773	$379,546
Annual Costs:			
Capital Costs	628	12,107	24,214
Depreciation	1,969	37,955	75,909
Operation & Maintenance Costs (Excluding Energy & Power Costs)	5,237	28,662	44,360
Energy & Power Costs	20	1,025	2,050
Total Annual Cost	$7,854	$79,749	$146,533

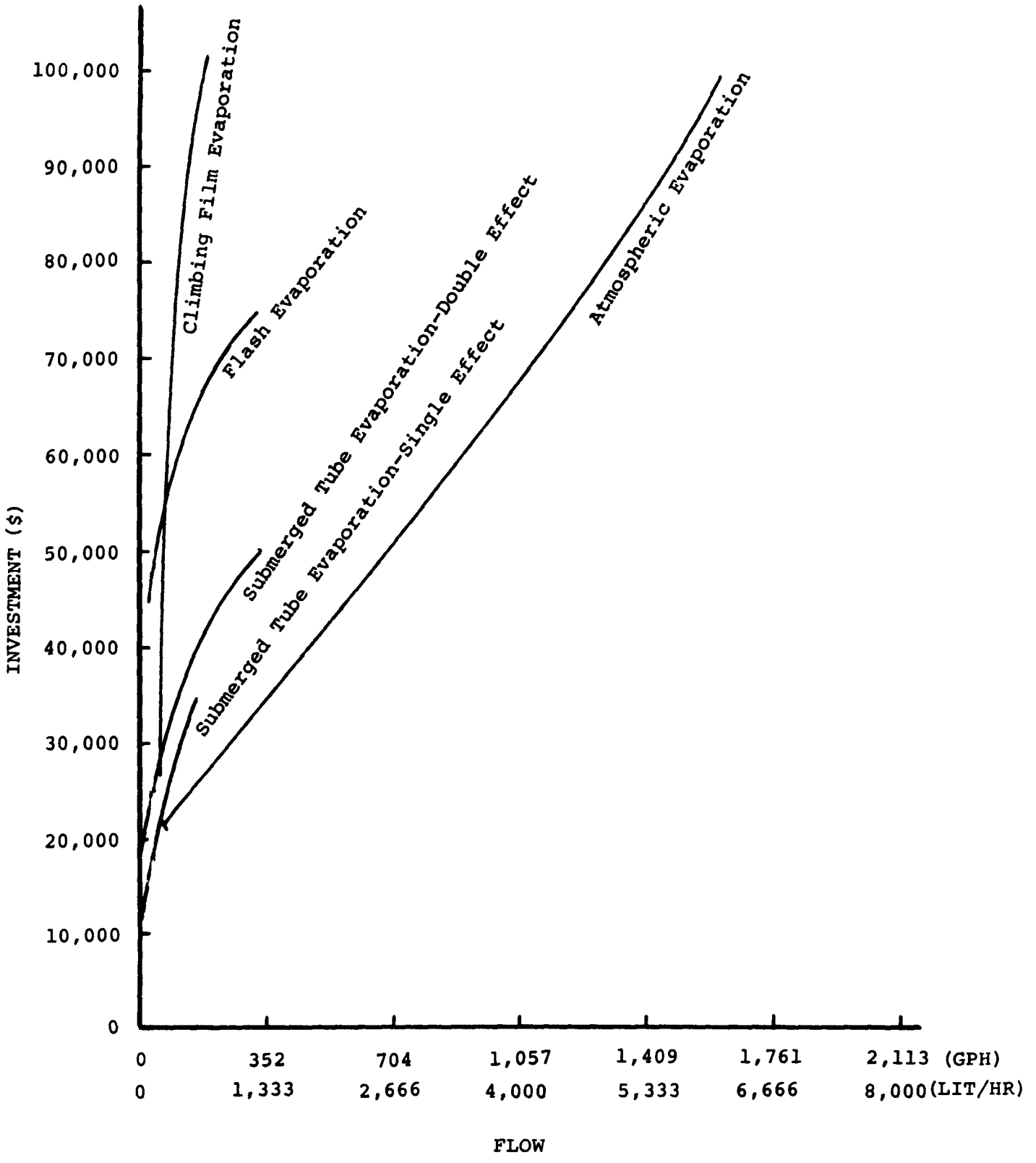

FIGURE 8-1. EVAPORATION INVESTMENT COST

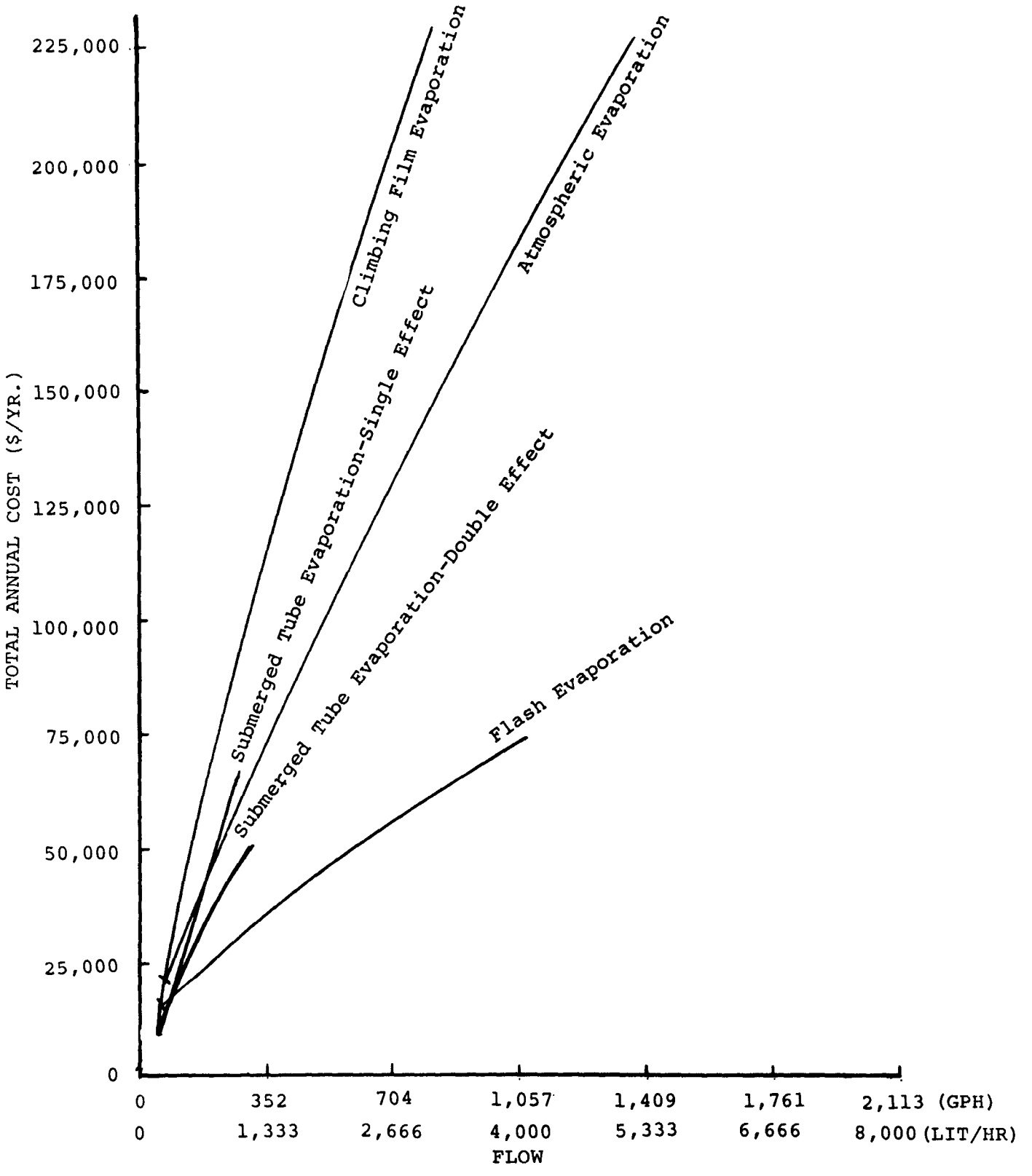

FIGURE 8-2. EVAPORATION TOTAL ANNUAL COST

where: liters/min recirc = 35
specific gravity = 1
HP = the horsepower
requirements for every 18,925 liters/day.

Membrane Filtration - The costs of membrane filtration are presented in Table 8-20. Costing assumptions are:

A. Investment cost includes the complete membrane filtration module and installation and is based on data supplied by the manufacturer.

B. Sodium hydroxide (NaOH) is added to precipitate the heavy metals as hydroxides.

C. Operation and maintenance cost includes maintenance labor, chemicals and electrical power to operate the membrane filtration module pump, mixers, and sump pumps.

D. The effluent sludge stream is assumed to be 15 percent solids.

Ion Exchange - In-Plant Regeneration - Ion exchange costs with in-plant regeneration are presented in Table 8-21. Costing assumptions are:

A. The unit size is based on two columns to allow both cation and anion exchangers of sodium and chloride, rather than hydrogen. An average resin life of seven years is assumed.

B. Regeneration is performed with a 10 percent aqueous solution of sulfuric acid. 2.0 kg of sulfuric acid is required for each 1.0 kg of removed contaminants. Regeneration requirements are based on typical influent values for chromium, cadmium, and nickel.

C. Heavy metals removal is assumed to be complete.

Ion Exchange - Service Regeneration - Ion exchange costs with service regeneration are presented in Table 8-22. Costing assumptions are:

A. Unit sizes and pump power requirements are based on data supplied by the manufacturer for standard system flow capacities.

B. Replacement units are installed in place of exhausted units every two months. Regeneration is performed by the manufacturer for a service charge.

TABLE 8-20

MEMBRANE FILTRATION

Flow Rate (Liters/Hr)	3,407	6,813	10,220
Investment	$42,136	$84,273	$126,409
Annual Costs:			
Capital Costs	2,688	5,376	8,065
Depreciation	8,427	16,855	25,282
Operation & Maintenance Costs (Excluding Energy & Power Costs)	8,075	13,046	18,017
Energy & Power Costs	2,275	2,275	2,275
Total Annual Cost	$21,465	$37,552	$ 53,639

TABLE 8-21

ION EXCHANGE - IN-PLANT REGENERATION

Flow Rate (Liters/Hr)	95	4,731	9,463
Investment	$2,789	$27,558	$42,660
Annual Costs:			
Capital Costs	178	1,758	2,722
Depreciation	558	5,512	8,532
Operation & Maintenance Costs (Excluding Energy & Power Costs)	951	9,338	15,912
Energy & Power Costs	0	0	0
Total Annual Cost	$1,687	$16,608	$27,166

TABLE 8-22

ION EXCHANGE - SERVICE REGENERATION

Flow Rate (Liters/Hr)	795	4,731	9,463
Investment	$5,040	$16,372	$21,840
Annual Costs:			
Capital Costs	345	1,044	1,393
Depreciation	1,080	3,274	4,368
Operation & Maintenance Costs (Excluding Energy & Power costs)	1,737	6,241	10,258
Energy & Power Costs	68	203	406
Total Annual Cost	$3,230	$10,762	$16,425

TABLE 8-23

CYCLIC ION EXCHANGE

Influent Chromium Mass (Kg/Hr)	0.91	2.72	4.08
Investment	$13,695	$27,034	$34,748
Annual Costs:			
Capital Costs	874	1,725	2,217
Depreciation	2,739	5,407	6,950
Operation & Maintenance Costs (Excluding Energy & Power Costs)	2,690	8,278	12,503
Energy & Power Costs	203	401	515
Total Annual Cost	$ 6,506	$15,811	$22,185

C. Metals, cyanide, and sulfates are removed to levels specified by the manufacturer.

Cyclic Ion Exchange - The costs for cyclic ion exchange are presented in Table 8-23 as a function of influent chromium mass. The same costs can be generated with nickel as the critical influent mass if the following mass equivalents are maintained:

Chromium Mass (kg/hour)	Nickel Mass (kg/hour)
0.91	3.40
2.72	7.47
4.08	9.98

Costing assumptions are:

A. Unit cost is determined by the influent chromium or nickel mass. Investment cost includes the skid mounted ion exchange system and start-up servicing. An auxiliary evaporator is not generally recommended by the manufacturer, and costs for this device are not included.

B. Operation, maintenance, and utility costs are included. The utility cost is an electrical charge for pump operation.

Reverse Osmosis - The costs of a spiral wound cellulose acetate reverse osmosis system are presented in Table 8-24. Costing assumptions are:

A. Unit investment, power, and operation and maintenance costs are based on permeate recovery of 95 percent as applied to manufacturers' cost data in gal/hr of permeate recovery. Unit cost can vary depending on whether the unit is designed for chromium or nickel removal. The unit costs presented are for nickel removal.

B. Installation cost is considered negligible when compared to equipment cost and is not included in investment cost.

C. Total operation and maintenance cost includes system and pump maintenance, pump reconditioning, and a membrane replacement cost based on membrane life of 1 1/2 years.

Comparison of Various In-Line and End-of-Pipe Process Costs

A comparison of the wastewater treatment process investment and annual costs presented in Tables 8-14 through 8-24 can best be made by placing the treatment processes in the following order:

TABLE 8-24

REVERSE OSMOSIS

Flow Rate (Liters/Hr)	2,366	4,731	9,462
Investment	$25,129	$38,658	$60,569
Annual Costs:			
Capital Costs	1,603	2,466	3,864
Depreciation	5,026	7,732	12,114
Operation & Maintenance Costs (Excluding Energy & Power Costs)	4,873	9,675	20,761
Energy & Power Costs	1,404	2,144	3,536
Total Annual Cost	$12,906	$22,017	$40,275

1. Reverse osmosis

2. Ion exchange, which includes ion exchange with service regeneration, ion exchange with in-plant regeneration, and cyclic ion exchange

3. Membrane filtration

4. Ultrafiltration

5. Atmospheric evaporation

6. Vacuum evaporation, consisting of submerged tube, climbing film, and flash modes of vacuum evaporation

The lowest required investment is for the reverse osmosis and ion exchange processes. The investment costs for both of these are very similar. The next lowest investment requirement is for membrane filtration which, in turn, is cheaper than atmospheric evaporation. The most expensive treatment processes are the ultrafiltration and vacuum evaporation processes both of which have similar investment requirements.

When comparing total annual costs of the wastewater treatment processes, reverse osmosis and ion exchange remain the least expensive, closely followed by membrane filtration. These three are followed by ultrafiltration which has total annual costs approximately midway between the lowest and highest processes. The most expensive in terms of total annual costs are atmospheric and vacuum evaporation, which have similar total annual cost levels. The high annual cost for the evaporation processes is caused by the fuel required to provide the heat to vaporize the wastewater. For the purpose of these cost comparisons, it was assumed that fuel must be burned specifically to feed the evaporation devices. If, in fact, a plant already has waste heat available, it is possible to significantly lower the fuel requirement, and, thus, the total annual cost of the evaporation processes.

System Cost Estimates (End-Of-Pipe Treatment)

This section presents the system cost estimates of the end-of-pipe chemical destruct treatment systems. A wide range of flow rates is presented to model a wide spectrum of plant sizes.

A representative end-of-pipe treatment system is schematically depicted in Figure 8-3. The chemical oxidation of cyanide, the chemical reduction of chromium, and the segregated chelated waste clarifier are shown as optional treatment processes. The use of any of these treatment processes is determined by the production processes

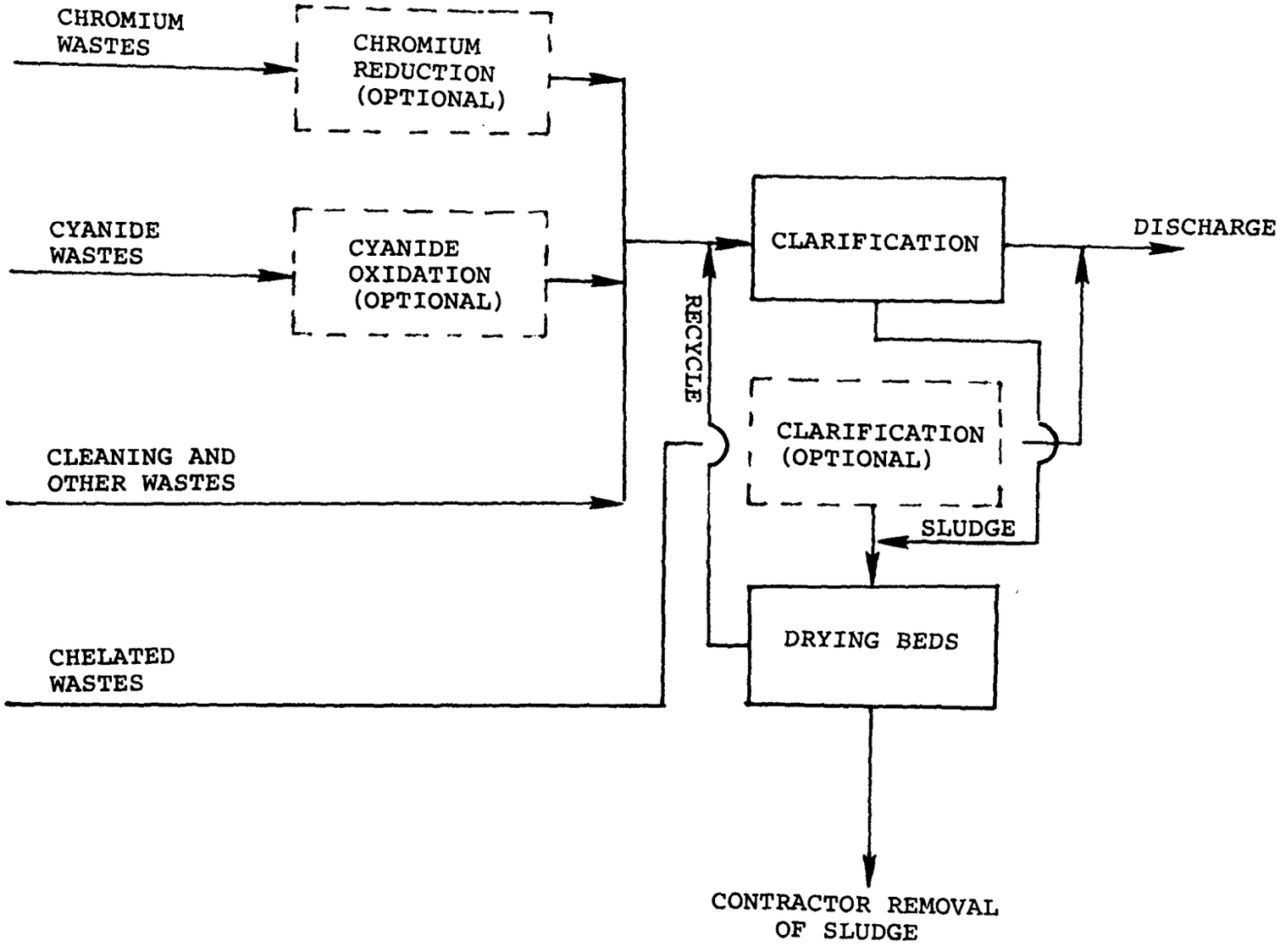

FIGURE 8-3. END-OF-PIPE TREATMENT SYSTEM

being employed at the plant. For example, electroless plating on plastics requires the chromium reduction process because of typical production processes of chromic acid pre-etching and etching. Cyanide oxidation is required if cyanide is used in the process baths at the plant. A separate clarifier is required for metal removal if a chelated waste stream is generated at the plant. For the purposes of the end-of-pipe treatment system cost estimates, chromium reduction and cyanide oxidation are assumed to be required treatment processes.

The costing assumptions for the chromium reduction, cyanide oxidation, and clarifier wastewater treatment processes were discussed above in "Technology Costs and Assumptions". In addition to these processes, sludge drying beds and contractor removal are also required for end-of-pipe treatment.

Sludge drying beds are used for sludge dewatering. The dewatered sludge is removed by a contractor and deposited in a secure landfill. A sludge bed loading of 0.318 liters per hour per square meter (0.0078 gallons per hour per square foot) with a bed excavated to a depth of 1.2 meters (4 feet) and an excess capacity factor of 1.5 are used to calculate the required drying bed area. This unit is not sized for any influent flow rate less than 189 liters per day (50 gallons per day) as the bed area becomes too small to warrant construction. Separated water is recycled to the clarifier inlet. Since this volume flow is so low, it is ignored when calculating the clarification costs.

Table 8-25 presents costs for the end-of-pipe treatment system for various treatment system influent flow rates for a plant with no electroless plating operations. A plant with electroless plating operations would require a separate clarifier for the segregated chelated waste stream. The basic cost elements used in preparing this table are the same as those presented for the individual technologies: investment, annual capital cost, annual depreciation, annual operation and maintenance cost (less energy and power cost), energy and power cost, and total annual cost. These elements were discussed in detail earlier in this section. Investment and annual operation and maintenance cost (less energy and power cost) are divided into wastewater treatment and sludge handling categories. Table 8-26 presents end-of-pipe treatment system costs where the separate clarifier is required for the segregated chelated waste stream.

For the cost computation, a "least cost" treatment system selection is performed. This procedure calculates the costs for a batch treatment system, a continuous treatment system, and haulaway of the complete wastewater flow over a 10 year comparison period and selects the cheapest system. A typical "least cost" treatment system is indicated on Tables 8-25 and 8-26 for the conditions outlined below.

TABLE 8-25

END-OF-PIPE TREATMENT WITHOUT CHELATED WASTES

Total Flow Rate (Liters/Hr)	7,885	23,655	236,562
Least Cost System	Batch	Batch	Continuous
Investment Costs:			
Wastewater Treatment	$ 96,142	$145,166	$431,143
Sludge Handling	22,600	39,000	247,000
Total Investment	$118,742	$184,166	$678,143
Annual Costs:			
Capital Costs	7,576	11,750	43,266
Depreciation	23,748	36,833	135,628
Operation & Maintenance Costs(Excluding Energy & Power Costs)			
Wastewater Treatment	7,555	19,731	33,267
Sludge Handling O & M	4,278	4,278	63,000
Total O & M	11,833	24,009	46,267
Sludge Hauling	1,557	4,680	46,800
Energy & Power Costs	627	1,341	1,057
Total Annual Costs	$ 45,341	$ 78,613	$273,018

TABLE 8-26

END-OF-PIPE TREATMENT WITH CHELATED WASTES

Total Flow Rate (Liters/Hr)	7,885	23,655	236,563
Least Cost System	Batch	Batch	Continuous
Investment Costs:			
Wastewater Treatment	$129,269	$183,313	$516,802
Sludge Handling	22,600	39,000	247,000
Total Investment	$151,869	$222,313	$763,802
Annual Costs:			
Capital Costs	9,689	14,183	48,731
Depreciation	30,734	44,463	152,760
Operation & Maintenance Costs(Excluding Energy & Power Costs)			
Wastewater Treatment	9,904	22,122	36,041
Sludge Handling O & M	4,278	4,278	13,000
Total O & M	14,182	26,400	49,041
Sludge Hauling	1,557	4,680	46,800
Energy & Power Costs	611	1,291	1,057
Total Annual Costs	$ 56,413	$ 91,017	$298,389

The various investment costs assume that the treatment system must be specially constructed and include all subsidiary costs discussed under the Cost Breakdown Factors segment of this section. Operation and maintenance costs assume continuous operation, 24 hours a day, 5 days per week, for 52 weeks per year. The typical waste loads and treatment system influent flow rates were based on the results of detailed waste and production analyses of the plants surveyed. Chromium and cyanide bearing wastes are each approximately 10 percent of the total plant wastewater discharge. When chelated wastes are present, they may amount to approximately 10 percent of the raw waste loading. The remainder of the wastewater flow appears as the common acid - alkaline stream. The total wastewater flow rates presented on Tables 8-25 and 8-26 are identical. However, chelated wastes have different parameter concentrations than the other waste streams. Therefore, a mass balance does not exist between Tables 8-25 and 8-26, and the costs in these two tables are not directly comparable.

The actual costs of installing and operating an end-of-pipe treatment system at a particular plant may be substantially below the tabulated values. Reductions in investment and operating costs are possible in several areas. Design and installation costs may be reduced by using plant engineering and maintenance personnel instead of contracting the work. Equipment costs may be reduced by using or modifying existing equipment instead of purchasing all new equipment. Application of an excess capacity factor, which increases the size of most equipment to compensate for shutdowns, may be unnecessary. Excavation and foundations costs could be reduced if an existing concrete pad or floor can be utilized. Equipment size requirements may be reduced by the ease of treatment (for example, shorter retention time) of particular waste streams. Substantial reductions in both investment and operating cost could be realized if a plant reduced its water use rate by various in-plant techniques. Then, to estimate its costs from the tables, the plant would use the projected flow rate rather than the current flow rate. If a plant has lower raw waste concentrations than those indicated in Section V, investment and, in particular, operating costs will be lower. The tabulated costs are based on around-the-clock operation 260 days per year. Thus, if a plant operates one or two shifts per day or has an annual shutdown period operation costs would be significantly lower. In some parts of the country, operating costs would be lower because of wage rates lower than the value used in the computations. Reductions in labor cost by using operating and maintenance personnel on a shared (part time) basis may also be practical.

Of the aforementioned cost reduction techniques, several were observed at plants visited during this study. The observed cost reduction techniques were:

1. System design and installation performed by plant engineering and maintenance personnel rather than by a contractor

2. Modification of existing wastewater treatment equipment, rather than purchase of new equipment, to improve wastewater treatment control

3. Utilization of existing concrete pads and flooring

4. Reduction in water use rate by in-plant production process modifications

5. Non-continuous plant operation

Cost estimates were also generated for an end-of-pipe batch treatment system for a small plating shop utilizing in-plant wastewater control techniques. The plating shop was assumed to operate eight hours per day, five days per week with a plating production rate of 75 square meters per hour and a water rate of 32 liters per square meter plated. This same system is applicable to a plating shop plating 150 square meters per hour with a water use rate of 16 liters per square meter. Approximately twenty-five percent of the water was assumed to be cyanide bearing and segregated from the remainder of the wastewater. System costs are based on a small plater treatment system consisting of batch cyanide oxidation and pH adjustment. The process assumptions for both cyanide oxidation and pH adjustment were discussed above in "Technology Costs and Assumptions".

To install this end-of-pipe treatment system requires an investment of approximately $20,000. This investment cost includes line segregation charges. The annual operation and maintenance costs (including energy and power costs) are estimated as approximately $1,190/year.

This shop was also analyzed with only a batch cyanide oxidation treatment. With approximately the same cyanide mass as in the aforementioned batch treatment system and with no wastewater flow segregation, this end-of-pipe treatment requires an investment of approximately $19,000. The annual operation and maintenance costs (including energy and power costs) are estimated as approximately $1,260/year.

Small plating shops may also utilize a completely manual treatment system to treat cyanide or chromium wastes. In this system, the total daily flow is held in fiberglass or metal wall, lined tanks. Chemicals are added manually at the end of each day before discharging the water.

The results of the cost program executions are estimated to be nominally accurate to $\pm$ 12 percent. Comparison by an independent contractor of the cost program output to actual plant data for

comparable wastewater treatment equipment indicates that this range of accuracy is being obtained.

System Cost Estimates (In-Line Processes)

System cost estimates of the effects of improved rinsing and recovery techniques on wastewater treatment and control costs have also been developed. These system cost estimates are an evolution of costs for a plant to go from series rinsing to countercurrent rinsing to plating solution recovery. It is shown that significant savings in plating solution and treatment system costs result from the installation of plating solution recovery units. These savings are sufficient to pay for the investments in advanced techniques in a short period of time.

A typical model plant was studied over a range of production plating rates. This typical plant was assumed to consist of a chromium plating line, a nickel plating line, and a copper plating line. Each plating line was assumed to have the required surface preparation and cleaning steps. While not an actual plant in the data base, this model was used to generate representative costs. System costs were surveyed over a range of plating rates from 18.1 square meters per hour (195 square feet per hour) to 108.7 square meters per hour (1,170 square feet per hour) for each plating line. It was assumed that constant plating tank surface areas would be applicable for this range of plating rates.

The overall treatment costs consist of rinsing and recovery costs and end-of-pipe treatment system costs. The end-of-pipe treatment system without plating solution recovery was applied to the chromium, copper, nickel, and cleaning rinse waters. This end-of-pipe treatment system is identical to the system presented in Figure 8-3, except the segregated chelated waste stream clarifier is omitted.

The system cost estimates for the various rinse techniques and end-of-pipe treatment systems are presented in Tables 8-27 through 8-29. Each table presents costs for the end-of-pipe treatment system (EOP), the rinse techniques (Rinse), and the combined EOP and Rinse costs (Total) for various plating production rates. The basic cost elements used in preparing these tables are the same as those presented for the individual technologies: investment, annual capital cost, annual depreciation, annual operation and maintenance cost (less energy and power cost), energy and power cost, and total annual cost. These elements were discussed in detail earlier in this section. Investment and annual operation and maintenance cost (less energy and power cost) are divided into wastewater treatment and sludge handling categories.

The various EOP investment costs assume that the EOP treatment systems must be specially constructed and include all subsidiary costs discussed under the Cost Breakdown Factors segment of this section. The

TABLE 8-27

BASE PLANT - RUNNING RINSES

Total Flow Rate (liters/hour)	2373			4742			9485			14227		
Plating Production (sq. mtrs/hr/line)	18.1			36.2			72.5			108.7		
	EOP	Rinse	Total	EOP	Rinse	Total	EOP	Rinse	Total	EOP	Rinse	Total
Investment Costs:												
Wastewater Treatment	$72284	$21321	$93605	$80900	$21321	$102221	$92216	$21321	$113537	$100510	$21321	$121831
Sludge Handling	25144	0	25144	34749	0	34749	52924	0	52924	70372	0	70372
Total Investment	$97428	$21321	$118749	$115649	$21321	$136970	$145140	$21321	$166461	$170882	$21321	$192203
Annual Costs:												
Capital Cost	6216	1359	7575	7378	1359	8737	9260	1359	10619	10902	1359	12261
Depreciation	19486	4263	23749	23130	4263	27393	29028	4263	33291	34176	4263	38439
Operation & Maintenance Costs (Excluding Energy & Power Cost)												
Wastewater Treatment	5462	89	5551	6467	176	6643	10637	353	10990	12513	528	13041
Sludge Handling- O & M	4247	0	4247	4317	0	4317	4597	0	4597	5730	0	5730
Total O & M	10355	89	10444	12074	176	12250	17814	353	18167	22113	528	22641
Sludge Hauling	3230	0	3230	6450	0	6450	12900	0	12900	19350	0	19350
Energy & Power Costs	323	753	1076	478	753	1231	685	753	1438	892	753	1645
Total Annual Cost	$38963	$6464	$45427	$48220	$6551	$54771	$67107	$6728	$73835	$83564	$6903	$90467

Note: Cost are for a plant that has 3 plating lines.

TABLE 8-28
3 STAGE COUNTERCURRENT RINSES

Total Flow Rate (liters/hour)	2080			4159			8318			12477		
Plating Production (sq. mtrs/hr/line)	18.1			36.2			72.5			108.7		
	EOP	Rinse	Total	EOP	Rinse	Total	EOP	Rinse	Total	EOP	Rinse	Total
Investment Costs:												
Wastewater Treatment	$68000	$25068	$93068	$74969	$25068	$100037	$83864	$25068	$108932	$90248	$25068	$115316
Sludge Handling	25210	0	25210	34853	0	34853	53086	0	53086	70582	0	70582
Total Investment	$93210	$25068	$118278	$109822	$25068	$134890	$136950	$25068	$162018	$160830	$25068	$185898
Annual Costs:												
Capital Costs	5947	1599	7546	7006	1599	8605	8737	1599	10366	10261	1599	11680
Depreciation	18642	5013	23655	21964	5013	26977	27390	5013	32403	32166	5013	37179
Operation & Maintenance Costs (Excluding Energy & Power Costs)												
Wastewater Treatment	5218	9	5227	5998	19	6017	9720	39	9759	11153	57	11210
Sludge Handling-O & M	4249	0	4249	4318	0	4318	4600	0	4600	5726	.0	5726
Total O & M	10118	9	10127	11619	19	11638	16925	39	16964	20796	57	20853
Sludge Hauling	3255	0	3255	6515	0	6515	13025	0	13025	19540	0	19540
Energy & Power Costs	315	1131	1446	450	1131	1581	630	1131	1761	810	1131	1941
Total Annual Cost	$37626	$7752	$45378	$46252	$7762	$54014	$64102	$7782	$71884	$79655	7800	$87455

Note: Costs are for a plant that has 3 plating lines.

TABLE 8-29

PLATING SOLUTION RECOVERY

Total Flow Rate (liters/hour)	2044			4088			8176			12263		
Plating Production (sq. mtrs/hr/line)	**18.0**			**36.2**			**72.5**			**108.7**		
	EOP	**Rinse**	**Total**	**EOP**	**Rinse**	**Total**	**EOP**	**Rinse**	**Total**	**EOP**	**Rinse**	**Total**
Investment Costs:												
Wastewater Treatment	**$40500**	**$29958**	**$70458**	**$44637**	**$34366**	**$79003**	**$49452**	**$39814**	**$89266**	**$52655**	**$47078**	**$99733**
Sludge Handling	**24040**	**0**	**24040**	**32132**	**0**	**32132**	**47478**	**0**	**47478**	**62129**	**0**	**62129**
Total Investment	**$64540**	**$29958**	**$94498**	**$76769**	**$34366**	**$111135**	**$96930**	**$39814**	**$136744**	**$114784**	**$47078**	**$161862**
Annual Costs:												
Capital Costs	**4118**	**1911**	**6029**	**4898**	**2192**	**7090**	**6184**	**2540**	**8724**	**7323**	**3003**	**10326**
Depreciation	**12908**	**5991**	**18899**	**15354**	**6873**	**22227**	**19386**	**7963**	**27349**	**22957**	**9416**	**32373**
Operation & Maintenance Costs (Excluding Energy & Power Costs)												
Wastewater Treatment	**4607**	**-5586**	**-979**	**4785**	**-11495**	**-6710**	**7294**	**-23391**	**-16097**	**7516**	**-35288**	**-27772**
Sludge Handling—O & M	**4239**	**0**	**4239**	**4299**	**0**	**4299**	**4327**	**0**	**4327**	**5340**	**0**	**5340**
Total O & M	**9419**	**-5586**	**3833**	**10230**	**-11495**	**-1265**	**13912**	**-23391**	**-9479**	**16293**	**-35288**	**-18955**
Sludge Hauling	**2865**	**0**	**2865**	**5730**	**0**	**5730**	**11455**	**0**	**11455**	**17185**	**0**	**17185**
Energy & Power Costs	**44**	**1434**	**1478**	**176**	**1615**	**1791**	**352**	**1818**	**2170**	**528**	**2130**	**2658**
Total Annual Cost	**$28781**	**$3750**	**$32531**	**$35241**	**$-815**	**$34426**	**$48999**	**$-11070**	**$37929**	**$60849**	**$-20739**	**$40110**

Note: Costs are for a plant that has 3 plating lines.
Negative entries under "Rinse" and "Total" result from savings in plating solution costs, made possible by installation of in-line rinse technology.

various rinse investment costs assume that the plating line is a programmed hoist operation and include line conversion costs as discussed previously under "Technology Cost Assumptions".

Operation and maintenance costs for both EOP and Rinse assume continuous operation, 24 hours per day, 5 days per week, 52 weeks per year. The Rinse operation and maintenance costs include a rinse water charge based on an average of in-plant process and municipal water charges.

Table 8-27 presents the costs of the base plant with two single stage running rinses following every plating operation. The resulting plating rinse waters and cleaning rinses then go to the end-of-pipe treatment system.

Table 8-28 presents the costs of replacing the single stage rinses with three stage countercurrent rinsing after each plating operation. This reduces the plating rinse water flows going to the end-of-pipe treatment system. Even though the precleaning rinse water flow rates were assumed to be unchanged, the total end-of-pipe treatment system influent flow rate is reduced because of the improved plating rinse techniques. This slightly lowers the costs of the end-of-pipe treatment system.

Table 8-29 presents the costs of implementing recovery after each plating operation. The end-of-pipe treatment system cost is for the system depicted in Figure 8-3 with chromium reduction, cyanide oxidation, and the segregated chelated waste stream clarifier omitted. The chromium plating operation is followed by a three stage countercurrent rinse with the final rinse waters going to a cyclic ion exchange unit for plating solution recovery. The nickel plating operation is followed by a three stage countercurrent rinse with the final rinse water going to a reverse osmosis unit to recover the plating solution and 95 percent of the rinse water. The copper plating operation is followed by a multi-stage countercurrent rinse with a rinse water flow rate sufficient to make up the plating tank evaporative loss. This also recovers the plating solution for reuse.

The savings in plating solution cost are depicted by a negative operation and maintenance cost in the "Rinse" columns of Table 8-29. The plating solution savings do not assume complete plating solution recovery but rather account for the fact that some of the plating solution will remain on the plated part after the final rinse. Typical plating solution recoveries are greater than 99.5 percent.

While Table 8-29 presents the costs of the new EOP treatment system, the effects of implementing recovery while maintaining the base plant EOP treatment system can also be determined. For example, if a plant plates 72.5 square meters per hour per line and converts from two

stage running rinses to a system to recover plating solutions and retains the end-of-pipe treatment system that existed previously, no new investment is required. The cost of capital and depreciation for EOP remains unchanged from that presented in Table 8-27. New operation and maintenance costs result due to lower flow rates into the EOP treatment system. The actual cost tabulation for this case is presented in Table 8-30. This table shows that investing $39,814 in recovery equipment results in a new total annual cost of $41,482/year. This is a reduction of $22,033/year from the plant's previous annual cost of $63,515/ year with two series running rinses as presented in Table 8-27 at a plating production rate of 72.5 square meters per hour per line. In this example, the savings in total annual costs pays for the recovery equipment in approximately two years. Payback periods range from 7.6 years for the smallest flow cases (18.1 square meters per hour per line) to 1.4 years for the largest flow case (108.7 square meters per hour per line).

In conjunction with the recovery costs presented in Table 8-29, additional costs will be incurred to reduce the effluent pollutant concentrations from an electroless plating process. At present, this chelated solution from an electroless plating process cannot be reused; however, specific wastewater treatment is required to reduce effluent concentrations to advanced treatment levels.

Table 8-31 presents the additional in-line treatment costs required to treat the chelated electroless nickel solution dragout from an electroless plating on metals or plastics process in other than a printed circuit board manufacturing plant. The costs represent three-stage countercurrent rinse after the electroless plating process with the rinse overflow water being treated by a spiral wound cellulose acetate reverse osmosis unit. Each rinse tank is an open top stainless steel tank with a depth of 1.22 meters (4 feet), length of 1.22 meters (4 feet), and width of 0.91 meters (3 feet). Rinse water flow rate calculations are based on a rinsing ratio of 3,000. The reverse osmosis and countercurrent rinse costing assumptions are the same as those discussed under "Technology Costs and Assumptions" above.

Table 8-32 presents the additional in-line treatment costs required to treat the chelated solution drag-out from an electroless plating process in a printed board plant. The costs represent 3-stage countercurrent rinse after the electroless plating process with the rinse overflow water being treated by a single effect submerged tube evaporator. The rinse tank sizes and rinsing ratio are the same as those used in developing Table 8-31. The submerged tube evaporator is a standard size unit of 94.6 liters per hour (25.0 gallons per hour) capacity. Fuel oil is burned specifically to feed the evaporation device. Costing assumptions for the submerged tube evaporator and the countercurrent rinse were discussed under "Technology Costs and Assumptions", above.

TABLE 8-30

PLATING SOLUTION RECOVERY WITH
BASE PLANT END-OF-PIPE TREATMENT

Metal Plating Production (sq. meters/hour/line)		72.5	
	EOP	Rinse	Total
Investment Cost:			
Wastewater Treatment	0	39814	39814
Sludge Handling	0	0	0
Total Investment	$ 0	$39814	$39814
Annual Costs:			
Capital Cost	9260	2540	11800
Depreciation	29028	7963	36991
Operation & Maintenance Costs (Excluding Energy & Power costs):			
Wastewater Treatment	7294	-23391	-16097
Sludge Handling O&M	4327	0	4327
Total O&M	13912	-23391	-9479
Sludge Hauling	11455	0	11455
Energy & Power Costs	352	1818	2170
Total Annual Costs	$61716	$-11070	$50646

Note: Costs are for a plant that has 3 plating lines.

TABLE 8-31

ELECTROLESS PLATING ON METALS AND PLASTICS IN-LINE

Dragout Flow Rate (Liters/Hour)	1.17	2.35	3.52
Investment	$10066	$10770	$11318
Annual Costs:			
Capital Costs	642	687	722
Depreciation	2013	2154	2264
Operation & Maintenance Costs (Excluding Energy & Power Costs)	473	528	577
Energy & Power Costs	654	692	720
Total Annual Cost	$3782	$4061	$4282

TABLE 8-32

PRINTED BOARD MANUFACTURE IN-LINE

Dragout Flow Rate (Liters/Hour)	1.17	2.35	3.52
Investment	$19359	$19359	$19359
Annual Costs:			
Capital Costs	1235	1235	1235
Depreciation	3872	3872	3872
Operation & Maintenance Costs (Excluding Energy & Power Costs)	305	609	914
Energy & Power Costs	2917	3681	4445
Total Annual Cost	$8328	$9397	$10466

System Cost Computation - A computer program was developed to calculate the system costs listed in the cost tables. A mathematical model or set of correlations was developed for each individual wastewater treatment technology. In general, these correlations related equipment size to influent flow rate and pollutant concentrations and, in turn, related cost to equipment size. The computer was programmed to combine specified individual treatment technologies in a specified arrangement forming a system. Using this arrangement, the computer then determined flow rates and concentrations at all points in the specified system, determined equipment sizes, determined equipment costs, and added these costs to arrive at a total system cost.

The correlations used for computing equipment size and cost were derived from cost data obtained from several sources listed under the "Technology Costs and Assumptions" heading. The data for wastewater flow rate, corresponding equipment size, and corresponding cost were related to form the correlations by means of a separate computer program. This program was developed to correlate the data by regression analysis, utilizing first order arithmetic equations, first order logarithmic equations, and multiple order equations, as appropriate.

Each cost estimation computer run involved several inputs and outputs. Specifically, to compute system costs, the computer required as input: (1) identification of system components (such as clarifier and cyanide oxidation), (2) a definition of how these components were schematically arranged, (3) raw wastewater flow rate, and (4) raw waste pollutant concentrations. The computer output consisted of a system cost breakdown. Investment cost was listed, and total annual cost was broken down to yield operation and maintenance cost, energy cost, depreciation, and cost of capital.

The program was developed to accept any of the components (up to 25 in a particular system) listed in Table 8-1. In addition, "mixers" and "splitters" were incorporated to represent merging or separating of streams. Also included were certain other industrial wastewater treatment processes. The schematic arrangement of these components that could be input to the computer was entirely flexible, permitting simulation and costing of many variations. Care was taken to assure reasonable results for large as well as small plants.

The program was designed to handle the wastewater parameters listed in Table 8-33. The program used standard values for certain factors such as depreciation rate, but different values could be input if desired.

Computer Techniques - The cost estimating computer program consists of a main routine which accepts the system input cards and accesses all other routines, a series of subroutines which compute the performance

TABLE 8-33

COST PROGRAM POLLUTANT PARAMETERS

Parameter, Units	Parameter, Units
Flow, MGD	Oil, Grease, mg/l
pH, pH units	Hardness, mg/l $CaCo_3$
Turbidity, Jackson units	Chemical Oxygen Demand, mg/l
Temperature, degree C	Algicides, mg/l
Dissolved Oxygen, mg/l	Total Phosphates, mg/l
Residual Chlorine, mg/l	Polychlorobiphenyls, mg/l
Acidity, mg/l $CaCO_3$	Potassium, mg/l
Alkalinity, mg/l $CaCO_3$	Silica, mg/l
Ammonia, mg/l	Sodium, mg/l
Biochemical Oxygen Demand, mg/l	Sulfate, mg/l
Color, Chloroplatinate units	Sulfite, mg/l
Sulfide, mg/l	Titanium, mg/l
Cyanides, mg/l	Zinc, mg/l
Kjeldahl Nitrogen, mg/l	Arsenic, mg/l
Phenols, mg/l	Boron, mg/l
Conductance, micromho/cm	Iron, Dissolved, mg/l
Total Solids, mg/l	Mercury, mg/l
Total Suspended Solids, mg/l	Nickel, mg/l
Settleable Solids, ml/l	Nitrate, mg/l
Aluminum, mg/l	Selenium, mg/l
Barium, mg/l	Silver, mg/l
Cadmium, mg/l	Strontium, mg/l
Calcium, mg/l	Beryllium, mg/l
Chromium, Total, mg/l	Surfactants, mg/l
Copper, mg/l	Plasticizers, mg/l
Fluoride, mg/l	Antimony, mg/l
Iron, Total, mg/l	Bromide, mg/l
Lead, mg/l	Cobalt, mg/l
Magnesium, mg/l	Thallium, mg/l
Molybdenum, mg/l	Tin, mg/l
Total Volatile Solids, mg/l	Chromium, Hexavalent, mg/l

and cost of each of the unit processes, a cost routine, and a routine for
printing the results. The main routine performs a system iteration for recycle systems until a mass balance has been established. The mass balance is established when the pollutant parameter concentrations in all the process streams differ from the values in the process streams in the previous iteration by less than one part in one hundred thousand or by 0.1 mg/l, whichever is larger.

The program was based on earlier work done by the EPA to compute costs of municipal treatment plants and a cost estimating computer program developed for the Machinery and Mechanical Products Manufacturing Industry and Electroplating Industry Effluent Limitations Guidelines. These earlier programs were analyzed, revised, and expanded to develop the present program. Further revisions and modifications were also incorporated during the course of the electroplating economic impact analysis wastewater treatment system cost estimation activities. The electroplating wastewater treatment cost estimating program was written in FORTRAN IV for an IBM 370-168 computer system.

Cost Breakdown Factors

The factors used to compute the values of the cost elements for the individual technologies and entire systems are defined and discussed under the following subheadings. They are Dollar Base, Investment Cost Adjustment, Supply Cost Adjustment, Cost of Labor, Cost of Energy and Power, Capital Recovery Costs, Debt-Equity Ratio, and Subsidiary Costs.

Dollar Base - A dollar base of January 1976 was used for all costs.

Investment Cost Adjustment - Investment costs were adjusted to the aforementioned dollar base by use of the Sewage Treatment Plant Construction Cost Index. This cost index is published monthly by the EPA Division of Facilities Construction and Operation. The national average of the Construction Cost Index for January 1976 was 256.7. Within each process, the investment cost was usually defined as some function of the unit size capacity. Where applicable, an excess capacity factor was used when obtaining the cost-determining size or capacity. This excess capacity factor is a multiplier on the size of the process to account for shutdown for cleaning and maintenance.

Supply Cost Adjustment - Supply costs such as chemicals were related to the dollar base by the Wholesale Price Index. This figure was obtained from the U.S. Department of Labor, Bureau of Labor Statistics, "Monthly Labor Review". For January 1976 the "Industrial Commodities" Wholesale Price Index was 177.3. Process supply and replacement costs were included in the estimate of the total process operating and maintenance cost.

Cost of Labor - To relate the operating and maintenance labor costs, the hourly wage rate for non-supervisory workers in water, steam, and sanitary systems was used from the U. S. Department of Labor, Bureau of Labor Statistics Monthly publication, "Employment and Earnings". For January 1976, this wage rate was $5.19 per hour. This wage rate was then applied to estimates of operational and maintenance man-hours within each process to obtain process direct labor charges. To account for indirect labor charges, 15 percent of the direct labor costs was added to the direct labor charge to yield estimated total labor costs. Such items as Social Security, employer contributions to pension or retirement funds, and employer-paid premiums to various forms of insurance programs were considered indirect labor costs.

Cost of Energy and Power - Energy and power requirements were calculated directly within each process. Estimated costs were then determined by applying either typical fuel costs of approximately 35 cents per gallon or, in the case of electrical requirements, a rate of approximately 2.7 cents per kilowatt hour.

The electrical charge for January 1976, was corroborated through consultation with the Energy Consulting Services Department of the Connecticut Light and Power Company. This electrical charge was determined by assuming that any electrical needs of a waste treatment facility or rinse operation would be satisfied by an existing electrical distribution system; i.e., no new meter would be required. This eliminated the formation of any new demand load base for the electrical charge, thus minimizing the electrical rates applied.

Capital Recovery Costs - Capital recovery costs were divided into straight line five-year depreciation and cost of capital at a ten percent annual interest rate for a period of five years. The five year depreciation period was consistent with the faster write-off (financial life) allowed for these facilities even though the equipment life is in the range of 20 to 25 years. The annual cost of capital was calculated by using the capital recovery factor approach.

The capital recovery factor (CRF) is normally used in industry to help allocate the initial investment and the interest to the total operating cost of the facility. The CRF is equal to the interest rate plus the interest rate divided by A-1. A is equal to the quantity 1 plus the interest rate raised to the Nth power, where N is the number of years the interest is applied. The annual capital recovery (ANR) was obtained by multiplying the initial investment by the CRF. The annual depreciation (D) of the capital investment was calculated by dividing the initial investment by the depreciation period N, which was assumed to be five years. The annual cost of capital was then equal to the annual capital recovery (ANR) minus the depreciation (D).

Debt-Equity Ratio - Limitations on new borrowings assume that debt may not exceed a set percentage of the shareholders equity. This defines the breakdown of the capital investment between debt and equity charges. However, due to the lack of information about the financial status of various plants, it was not feasible to estimate typical shareholders equity to obtain debt financing limitations. For these reasons, no attempt was made to break down the capital cost into debt and equity charges. Rather, the annual cost of capital was calculated via the procedure outlined in the Capital Recovery Costs section above.

Subsidiary Costs - The costs presented in Tables 8-25 through 8-30 for end-of-pipe and advanced wastewater control and treatment systems include all subsidiary costs associated with system construction and operation. These subsidiary cost functions include:

- administrative and laboratory facilities
- garage and shop facilities
- line segregation
- yardwork
- land
- engineering
- legal, fiscal, and administrative
- interest during construction

Administrative and laboratory facility investment is the cost of constructing space for administration, laboratory, and service functions for the wastewater treatment system. For these cost computations, it was assumed that there was already an existing building and space for administration, laboratory, and service functions. Therefore, there was no investment cost for this item.

For laboratory operations, an analytical fee of $80 (January 1976 dollars) was charged for each wastewater sample, regardless of whether the laboratory work was done on or off site. This lab fee estimate includes the analysis of hexavalent chromium and cyanide amenable to chlorination, as well as the regulated pollutants for platers discharging more than 10,000 gallons per day of electroplating process wastewater. This analytical fee is typical of the charges experienced during the past several years of sampling programs. The frequency of wastewater sampling is a function of wastewater discharge flow and is presented in Table 8-34.

TABLE 8-34

WASTEWATER SAMPLING FREQUENCY

Wastewater Discharge (liters per day)	Sampling Frequency
0 - 37,850	once per month
37,850 - 189,250	twice per month
189,250 - 378,500	once per week
378,500 - 946,250	twice per week
946,250 +	thrice per week

For the industrial waste treatment facilities being costed, no garage and shop investment cost was included. This cost item was assumed to be part of the normal plant costs and was not allocated to the wastewater treatment system.

Line segregation investment costs account for plant modifications to segregate wastes. The investment costs of line segregation included placing a trench in the existing plant floor and installing the lines in this trench. The same trench was used for all pipes and a gravity feed to the treatment system was assumed. The pipe was assumed to run from the center of the floor to a corner. Plant floor area was related to discharge flow by the results of an analysis of 300 plants visited for which flow and floor area were available. This data indicated that 2.04 liters per hour of wastewater is discharged per square meter of floor area (0.05 gallons per hour per square foot).

The yardwork investment cost item includes the cost of general site clearing, intercomponent piping, valves, overhead and underground electrical wiring, cable, lighting, control structures, manholes, tunnels, conduits, and general site items outside the structural confines of particular individual plant components. This cost is typically 9 to 18 percent of the installed components investment costs. For these cost estimates, an average of 14 percent was utilized. Annual yardwork operation and maintenance costs are considered a part of normal plant maintenance and were not included in these cost estimates.

No new land purchases were required. It was assumed that the land required for the end-of-pipe treatment system was already available at the plant.

Engineering costs include both basic and special services. Basic services include preliminary design reports, detailed design, and certain office and field engineering services during construction of projects. Special services include improvements studies, resident engineering, soils investigations and surveys, operation and maintenance manuals, and other miscellaneous services. Engineering cost is a function of process installed and yardwork investment costs.

Legal, fiscal and administrative costs relate to planning and construction of wastewater treatment facilities and include such items as preparation of legal documents, preparation of construction contracts acquisition of land. These costs are a function of process installed, yardwork, engineering, and land investment costs.

Interest cost during construction is the interest cost accrued on funds from the time payment is made to the contractor to the end of the construction period. The total of all other project investment costs (processes installed; yardwork; land; engineering; and legal,

fiscal, and administrative) and the applied interest affect this cost. An interest rate of 10 percent was used to determine the interest cost for these estimates.

For the rinse process costs, line conversion costs and rinse water charges based on an average of typical in-plant process and municipal water charges were included. It was assumed that a rinse water source was available within three meters of the rinse tanks so minimum pipe charges were included.

ENERGY AND NON-WATER QUALITY ASPECTS

Energy and non-water quality aspects of the wastewater treatment technologies described in Section VII are summarized in Tables 8-35 and 8-36. Energy requirements are listed, the impact on air and noise pollution is noted, and solid waste generation characteristics are summarized. The treatment processes are divided into two groups, wastewater treatment processes on Table 8-35 and sludge and solids handling processes on Table 8-36.

Energy Aspects

Energy aspects of the wastewater treatment processes are important because of the impact of energy use on our natural resources and on the economy. Electrical power and fuel requirements (coal, oil, or gas) are listed in units of kilowatt hours per ton of dry solids for sludge and solids handling. Specific energy uses are noted in the "Remarks" column.

Energy requirements are generally low, although evaporation can be an exception if no waste heat is available at the plant. Thus, if evaporation is used to avoid discharge of pollutants, the influent water rate should be minimized by all means possible. For example, an upstream reverse osmosis or ultrafiltration unit can drastically reduce the flow rate of wastewater to an evaporation device.

Non-water Quality Aspects

It is important to consider the impact of each treatment process on air, noise, and radiation pollution of the environment to preclude the development of a more adverse environmental impact.

None of the liquid handling processes causes air pollution. Incineration of sludges or solids can, however, cause significant air pollution. In fact, efforts to reduce this air pollution by scrubbing can result in water pollution. Noise pollution disturbs equipment operators even more than the surrounding community. However, none of the wastewater treatment processes causes objectionable noise in either

TABLE 8-35

NONWATER QUALITY ASPECTS OF WASTEWATER TREATMENT

	ENERGY			NONWATER QUALITY IMPACT				
PROCESS	Power kw/1000 liter/min	Fuel kw/1000 liter/min	Energy Use	Air Pollution Impact	Noise Pollution Impact	Solid Waste	Solid Waste Concentration % Dry Solids	Solid Waste Disposal Technique
Neutralization	6-8.7	----	Mixing	None	None	None	----	N/A
Chemical Reduction	4.4-9.0	----	Mixing	None	None	None	----	N/A
Clarification	0.1-3.2	----	Sludge Collector Drive	None	None	Concentrated	1-10	Thicken, Dry & Landfill or Incinerate
Flotation	36	----	Recirculation Pump, Compressor, Skim	None	None	Concentrated	3-5	Skim, Dry, Landfill or Incinerate
Chemical Oxidation By Chlorine	4.4-96	----	Mixing	None	None	None	----	N/A
Oxidation By Oxygen	4.4-9.0	----	Mixing	None	None	None	----	N/A
Chemical Precipitation	1.02	----	Flocculation Paddles	None	None	Concentrated	3-10	Dewater, Landfill
Sedimentation	0.1-3.2	----	Sludge Collector Drive	None	None	Concentrated	1-3	Dewater & Landfill or Incinerate
Deep Bed Filtration	0.02	----	Head, Backwash Pumps	None	None	Concentrated	Variable	Backwash to Settling
Ion Exchange	30	----	Pumps	None	Not Objectionable	None	N/A	N/A
Evaporationn	----	2,500,000	Evaporate Water	None	None	Concentrated/ Dewatered	50-100	Landfill or Incinerate
Reverse Osmosis	130-390	----	High Pressure Pump	None	Not Objectionable	Dilute Concentrate	1-40	Distill & Incinerate, Landfill
Ultrafiltration	2.5-26	----	High Pressure Pump	None	Not Objectionable	Dilute Concentrate	1-40	Distill & Incinerate, Landfill
Membrane Filtration	2.5-26	----	High Pressure Pump	None	Not Objectionable	Dilute Concentrate	1-40	Distill Incinerate, Landfill
Electrodialysis	79.5	----	Ion Transport	None	None	Dilute Concentrate	1-5	Distill, Landfill

TABLE 8-36.

NONWATER QUALITY ASPECTS OF SLUDGE AND SOLIDS HANDLING

	ENERGY			NONWATER QUALITY IMPACT				
	Power	Fuel						
PROCESS	kwh/ton dry solids		Energy Use	Air Pollution Impact	Noise Pollution Impact	Solid Waste	Solid Waste Concentration % Dry Solids	Solid Waste Disposal Technique
Sludge Thickening	29-930	----	Skimmer, Sludge Rake Drive	None	None	Concentrated	4-27	Dewater & Landfill or Incinerate
Pressure Filtration	21	----	High Pressure Pumps	None	None	Dewatered	25-50	Landfill or Incinerate
Sand Bed Drying	----	35	Removal Equipment	None	None	Dewatered	15-40	Landfill
Vacuum Filter	16.7-66.8	----	Vacuum Pump, Rotation	None	Not Objectionable	Dewatered	20-40	Landfill or Incinerate
Centrifugation	0.2-98.5	----	Rotation	None	Not Objectionable	Dewatered	15-50	Landfill or Incinerate
Landfill	----	20-980	Haul, Landfill 1-10 Mile Trip	None	None	Dewatered	N/A	N/A
Lagooning	----	36	Removal Equipment	None	None	Dewatered	3-5	Dewater & Landfill
Incineration	38	----	Rakes, Cooling Fan (Feed Combustible)	Significant (Dust)	Not Objectionable	Dewatered/ Scrubber Water	100 & Scrubber	Landfill Ash/ Return Scrubber
Pyrolysis	----	27-127	Air Supply, Gas Handling, Feed	Minor (Dust, Odor, Flammable)	None	Dewatered	100	Landfill or Byproduct Recovery

respect. None of the treatment processes has any potential for radioactive radiation hazards.

The solid waste impact of each wastewater treatment process is indicated in three columns on the table. The first column shows whether effluent solids are to be expected and, if so, the solids content in qualitative terms. The second column lists typical values of percent solids of the sludge or residue. The third column indicates the usual method of solids disposal associated with the process.

The processes for treating the wastewaters from this category produce considerable volumes of sludges. In order to ensure long-term protection of the environment from harmful sludge constituents, special consideration of disposal sites should be made. All landfill sites should be selected to prevent horizontal and vertical migration of these contaminants to ground or surface waters. In cases where geological conditions may not be expected to prevent this, adequate mechanical precautions (e.g., impervious liners) should be used for long-term protection of the environment. A program of routine periodic sampling and analysis of leachates is advisable. Where appropriate, the location of solid hazardous materials disposal sites should be permanently recorded in the appropriate office of legal jurisdiction.

SECTION IX

BEST PRACTICABLE CONTROL TECHNOLOGY CURRENTLY AVAILABLE, GUIDELINES AND LIMITATIONS

These limitations will be developed at a later date.

SECTION X

BEST AVAILABLE TECHNOLOGY ECONOMICALLY ACHIEVABLE, GUIDELINES AND LIMITATIONS

These limitations will be developed at a later date.

SECTION XI

NEW SOURCE PERFORMANCE STANDARDS

These limitations will be developed at a later date.

SECTION XII

PRETREATMENT

TECHNICAL APPROACH

Pretreatment standards for electroplating were developed in the following manner. The point source category was first studied for the purpose of determining whether separate standards were appropriate for different segments within the category. The raw waste characteristics of each segment were then identified. This included an analysis of the source, flow, and volume of water used in the process employed; the sources of waste and waste waters in the operation, and; the constituents of all waste water. The compatibility of each raw waste characteristic with municipal treatment works was considered. Waste water constituents posing pass-through or interference problems for POTWs were identified.

The control and treatment technologies appropriate to each segment were also identified, including both existing in-plant and end-of-process technologies as well as those capable of being designed for each segment. The effluent level resulting from the application of each of the technologies, in terms of the amount of constituents and the chemical, physical, and biological characteristics of pollutants, was also identified. The problems, limitations, and reliability of each treatment and control technology were determined next. In addition, the nonwater quality environmental impact, such as the effects of the application of such technologies upon other pollution problems (ie., air, solid waste, noise, and radiation) were evaluated. Finally, the energy requirements of each control and treatment technology were determined, as well as the cost of the application of such technologies.

The information, as outlined above, was then evaluated to find the appropriate level of effluent pretreatment given the total cost of application of the technology, the age of equipment and facilities involved, the process employed, the engineering aspects of the application of various types of control techniques, process changes, nonwater quality environmental impact (including energy requirements), and other factors.

The data upon which the above analyses were performed included EPA permit applications, EPA sampling and inspections, consultant reports, and industry submissions.

STATISTICAL METHODOLOGY

This section provides an overview of statistical methodologies employed to determine pretreatment standards for the electroplating industry. The methodology consisted essentially of determining long term average pollutant discharges, expected from a well designed and operated pretreatment system, and multiplying these long term averages by variability factors designed to allow for random fluctuations in treatment system performance. The resulting products yielded daily and 30-day-average maximum limitations for each pollutant. A simple, approximate equation was employed to obtain N-day-average maximum limitations for N = 2, 3,...29. Modifications of this procedure were made to accommodate mass-based and TSS options. The general statistical derivation of long term averages, variability factors, and the resulting limitations follows.

Determination of Long Term Average

The long term average (LTA) is the expected discharge concentration of a pollutant in mg/l from an electroplating plant having a well designed, maintained, and operated pretreatment system. The long term average was determined for each pollutant to be regulated, and used to obtain corresponding limitations for that pollutant. It is not intended as a limitation itself, but rather as a specification which the pretreatment system should be designed to attain over the long term.

For the analyses on hexavalent chromium and cyanide and the metals plated in the Electroless and Printed Circuit Board subcategories, the long term average was calculated as the median of the plant averages for each of these pollutants.

Determination of Variability Factors

Even plants that are achieving good pollutant removal experience fluctuations in the discharge pollutant concentrations from their pretreatment system. These fluctuations may reflect temporary imbalances in the treatment system caused by fluctuations in flow, raw waste load of a particular pollutant, chemical feed, mixing flows within tasks, or a variety of other factors.

Allowance for the day-to-day variability in the concentration of a pollutant discharged from a well designed and operated treatment system is incorporated into the standards by the use of a "variability factor." The theoretical derivation of the variability factor is presented in Appendix XII-A.1. Under certain assumptions, discussed below, the application of a variability factor allows the calculation of an upper bound for the concentration of a particular pollutant such that in expectation 99 percent of the randomly observed daily values

from a pretreatment system discharging this pollutant at a known mean concentration will fall below this bound.

The theoretical derivation of the yariability factor is based on the assumption that the daily pollutant concentrations follow a lognormal distribution. This assumption is supported by test statistics (Kuiper and Kolmogorov-Smirnov, not reported here), plots of the cumulative distribution of observed concentrations for various pollutants (as shown later), and comparisons of variability factors estimated from plant data by two theoretically equivalent formulas (Appendix XII-A.3).

The variability factor is estimated by the equation derived in Appendix XII-A.1, which is:

$$\log (VF) = Z(Sigma) - 1.15(Sigma)^2 \qquad [1]$$

where

VF is the variability factor

Z is 2.326, which is the 99 percentile of the standard normal distribution, and

Sigma is the standard deviation of the logarithms (base 10) of the concentrations.

The accuracy of the variability factor is a function of the accuracy of Sigma, the standard deviation of the logarithm of the observations of a well designed and well operated plant. Important considerations for assessing the accuracy of Sigma include:

1. the randomness of the concentrations sampled for each plant,

2. the number and accuracy of the daily samples per plant,

3. the number and appropriateness of the plants included in the sample, and

4. the assumption that the daily pollutant concentrations follow a lognormal distribution.

The last consideration has been discussed above. The methodology for obtaining Sigma, and thus VF, takes into consideration the first three factors.

The estimated single-day variability factor of a pollutant from a well designed and operated plant was calculated in the following manner:

1. For each plant[1] with 10 or more but less than 100 observations and a small number of 0 values[2] for the pollutant, Sigma was calculated according to the standard statistical formula[3] and was then substituted into Equation [1] to find the VF.

2. For those plants with over 100 observations, the VF was estimated directly by dividing the 99th percentile of observed sample values by the average of the observations.

3. The VF for each pollutant was then calculated to be the median of the plant variability factors for that pollutant.

Allowance for the variability of the average of a random sample of N daily observations about the mean value of a pollutant discharged from a well designed and operated pretreatment system was obtained by use of a theoretically derived term (Appendix XII-A.2) called the "N-day-

---

[1]Plants with both high and low average concentrations fulfilling the stated conditions were included in the data base to calculate the variability factors. This was done since Appendix XII-A.4 showed that the sample means and standard deviations of the logarithms of the concentrations of a specific pollutant for each plant were not significantly correlated across plants, i.e., standard deviations from plants with high average concentration were not significantly larger than standard deviations from plants with low average concentrations for each pollutant. This is consistent with the assumption of lognormality.

[2]Only 7 of 68 cases observed effluent concentrations of 0 and these never represented more than 25% of the observations. Since log(0) is undefined, the 0 values were set equal to one-half the next lowest pollutant concentration. This was found to have little effect on the results and in six of the above seven cases, the individual variability factors were greater than the median variability factor.

[3] $$\frac{(x \quad - x)^2}{n-1}$$

where

x is the log of observation i
x is the average of the observations
n is the number of observations

average variability factor." This term allows the calculation of an upper bound for the concentration of a particular pollutant (under the same assumptions stated above) such that in expectation 99 per cent of the randomly observed N-day average values from a pretreatment system discharging the pollutant at a known mean concentration will fall below this bound. Thirty-day average variability factors are reported in all analyses.

The N-day-average variability factor was estimated by a theoretically based equation (Appendix XII-A.2).

$$\log(VF\ ) = Z(Sigma\ ) - 1.15(Sigma\ )^2 \qquad [2]$$

where

VF is the N-day-average variability factor

Z is 2.326, which is the 99th percentile of the standard normal distribution, and

Sigma is a function of Sigma and N.

Sigma can be obtained from the estimate of the (daily) variability factor, VF, as outlined in Appendix XII-A.2. This is a departure from the Monte Carlo simulation used to calculate this term in the previous Development Document for proposed electroplating pretreatment regulations.

Determination of Limitations

Daily maximum and 30-day-average maximum limitations (L and L_{30}, respectively) were calculated for each pollutant from the long term average (LTA), the daily variability factor (VF), and the 30-day-average variability factor (VF_{30}) for that pollutant by the following equations:

$$L = VF \times LTA \qquad [3]$$

$$L_{30} = VF_{30} \times LTA \qquad [4]$$

The daily maximum limitation calculated for each pollutant is a value which is not to be exceeded on any one day by a plant discharging that pollutant. The 30-day-average maximum limitation is a value which is not to be exceeded by the average of any 30 single-day observations for the regulated pollutant.

TREATMENT OF CYANIDE

The distinction between amenable cyanide (CN,A) and total cyanide (CN,T) stems from the chemical form of the cyanide in the waste stream. Much of the cyanide-containing waste enters the treatment system as a free ion, or in the form of complexes with Cu, Zn, Cd, or Pb. Such cyanide is rapidly oxidized to cyanate in the first stage of an alkaline chlorination treatment system, and falls into the category, CN,A. Under some circumstances, a portion of the cyanide may be present as iron or other heavy metal cyanide complexes. Since these compounds are much more difficult to oxidize than free cyanide, their formation should be avoided or minimized by careful attention to proper housekeeping practices previously discussed.

Technologies for treating cyanide were described in detail in Chapter VII.

Calculation of the Long Term Average for Amenable Cyanide (CN,A)

The destruction of CN,A by alkaline chlorination is a kinetically rapid reaction. A plant with an adequately sized and controlled treatment unit followed by pH adjustment and settling should achieve nearly complete removal of CN,A. This can be seen from the data in Table 12-1. Of the 46 plants with data summarized in this table, 15 (32%) reduced the average CN,A to 0.02 mg/l or less.

The plants described in Table 12-1 are those which: (a) plate Cu, Cd, Zn, or precious metals; (b) have an oxidation system to treat their CN wastes; and (c) have CN,A concentration data. An effort has been made to make Table 12-1 as complete as possible, by including all appropriate CN,A data (from the data base compiled for analysis by this Agency) from those plants plating the appropriate metals and having oxidation treatment.

However, certain plants were found inappropriate and were thus eliminated from the data base for CN,A long-term calculations. Among these were: (a) three plants (6078, 19002, 33071) with cyanide destruct systems which were not operating properly or which were partially bypassed; (b) six plants (6050, 6053, 6077, 6087, 6358, 19051) with Lancy or Integrated pretreatment systems, and; (c) five plants (6051, 6079, 6081, 19050, 36040) specified as having low cyanide bearing wastes.

Figure 12-1 is a cumulative plot of the average CN,A concentrations in the effluent from the 46 plants shown in Table 12-1. The plot shows that 21% of the plants removed essentially all amenable cyanide (down to CN,A less than or equal to 0.01 mg/l), and also shows that many of the remaining plants, although not reaching this low level, still

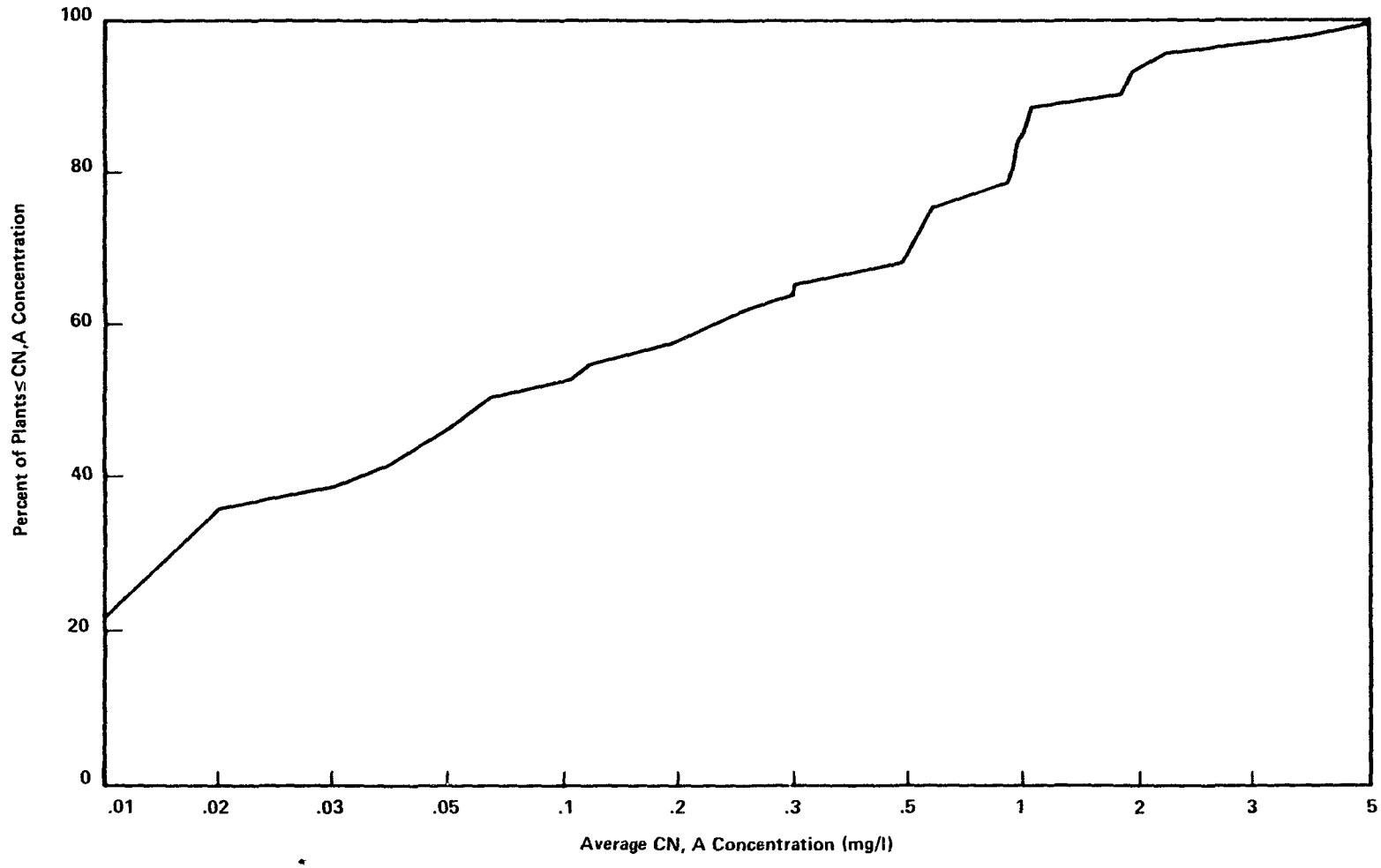

FIGURE 12-1

CUMULATIVE PLOT OF AVERAGE CN,A IN DISCHARGES FROM 47 PLANTS

TABLE 12-1

CN,A CONCENTRATIONS OBSERVED IN THE FINAL EFFLUENT FROM PLANTS WITH CYANIDE OXIDATION IN WASTE TREATMENT SYSTEM

Plant ID	Data* Source	Number Obs.	Concentration CN,A Median	Avg.	Max.
4	1	1	0.04 mg/l	0.04 mg/l	0.05 mg/l
6	1	1	.32	.32	.32
7	1	2	.25	.25	.25
8	1	2	.80	.80	1.00
15	1	11	.50	1.31	7.90
19	1	11	.42	.56	1.40
116	2	1	.01	.01	.01
478	2	2	.06	.06	.08
652	2	1	.01	.01	.01
804	3	11	.01	.02	.15
1108	1	13	.49	.62	1.90
1113	1	9	.04	.16	.68
1924	3	3	.03	.07	.17
2001	3	114	.04	.04	.06
2007	1	2	.02	.02	.03
2103	3	13	.01	.01	.03
3301	1	4	.01	.02	.03
3320	1	2	.02	.02	.02
3601	1	1	.01	.01	.01
4045	4	3	1.00	1.15	2.20
5021	4	3	.01	.01	.01
6037	4	3	.41	4.04	11.60
6072	4	2	.01	.01	.01
6073	4	3	1.46	2.24	3.98
6075	4	2	.01	.01	.01
6084	4	1	1.97	1.97	1.97
6085	4	3	.56	.57	1.09
6089	4	3	.29	.53	1.14
6381	4	3	.10	.31	.75
9026	4	3	.01	.02	.03
10020	4	3	4.40	5.30	7.30
15070	4	3	.01	.01	.02
20073	4	6	.01	.02	.05
20077	4	6	.39	.98	3.00
20078	4	6	.01	.01	.01
20079	4	6	.01	.01	.01
20080	4	7	.01	.03	.10
20081	4	6	.02	.13	.49

(continued on next page)

TABLE 12-1 (Continued)

Plant ID	Data* Source	Number Obs.	Concentration CN,A Median	Avg.	Max.
20082	4	2	.79 mg/l	.96 mg/l	3.00 mg/l
20084	4	3	1.25	1.25	2.50
20086	4	3	.36	1.87	5.25
20087	1	3	.66	.49	.80
31021	4	3	.05	.05	.05
33024	3 & 4	3	.04	.05	.08
33073	4	3	.02	.02	.03
36041	4	3	.10	.20	.40

*1 = Data from reports by Yost et al., and Safranek et al.
2 = Battelle
3 = Plant
4 = Hamilton Standard.

achieved fairly good CN,A removal. The median or long term average value for CN,A was .07 mg/l.

In some plants, the cause of high effluent CN,A concentrations appeared to be poor design or control of the treatment system. For instance, sampling personnel, although not specifically instructed to evaluate the design or operation of plant treatment systems during sampling visits, noted potential design flaws (4045, 10020, 20084), a history of chlorine feed malfunctions (6073), and spillage to streams of untreated cyanide bearing solutions (20086).

Calculation of the Long Term Average for Total Cyanide (CN,T)

Table 12-2 presents comparable data for 65 plants with cyanide wastes, oxidation treatment, and CN,T measurements. Figure 12-2 is a cumulative plot of the average CN,T values for these plants. A comparison of Figure 12-1 and 12-2 shows them to be similar in form. In both cases, a substantial fraction of the plants achieved nearly complete cyanide removal: 34 percent of the Figure 12-2 plants experienced average CN,T effluent concentrations of less than 0.04 mg/l, with the median value or long term average being 0.15 mg/l.

The plants deleted from the CN,A analysis were also eliminated from the CN,T analysis for the same reasons given above. Also, three plants (2017, 2811, 3321) were eliminated from the analysis in Table 12-2 because they combined waste waters from other types of operations. Additionally, the reported data from plants 689, 3301, and 4301 were deleted as suggested by industry commenters due to nonstandard analytical techniques.

Calculation of the Variability Factors

As Tables 12-1 and 12-2 show, even plants achieving good cyanide removal occasionally experience a day of higher than usual cyanide discharge. To allow for these fluctuations, variability factors were calculated as outlined in the section on statistical methodology. The calculation of this variability was based on the observation that in this industry, as in many industries, the discharge concentrations of metal and cyanide follow a standard lognormal statistical distribution. Figure 12-3 shows a cumulative plot, on a log probability scale, of 24 daily observations of CN,T from plant number 3320. The data fall nearly along a straight line, indicating that the distribution of observations from this plant may indeed be assumed consistent with lognormality. Figure 12-4 is a cumulative plot of the CN,A data furnished for plant 1108. The points in this figure again fall along a straight line, indicating that this sample also conforms to lognormality.

TABLE 12-2

CN,T CONCENTRATIONS OBSERVED IN THE FINAL EFFLUENT FROM PLANTS WITH CYANIDE OXIDATION IN WASTE TREATMENT SYSTEMS

Plant ID	Data* Source	Number Obs:	Concentration CN,T Median	Avg.	Max.
4	1	2	.25 mg/l	.25 mg/l	.38 mg/l
6	1	2	16.72	16.72	31.80
7	1	2	.45	.45	.59
8	1	2	14.00	14.00	16.00
15	1	11	1.30	2.65	12.00
19	1	11	.78	.80	1.60
116	3	37	.01	.12	2.22
478	2	3	.25	.31	.61
607	2 & 3	3	.12	.11	.16
629	2	1	.07	.07	.07
652	2	1	.01	.01	.01
662	3	7(m)	.30	.36	.96
805	2 & 3	21	nil	nil	.05
902	3	6	nil	nil	nil
1108	1	13	1.00	1.38	4.00
1113	1	9	.05	.21	.78
1165	2	2	.06	.06	.12
1208	3	37	.10	.15	.92
1209	2	1	.03	.03	.03
1263	2	1	.01	.01	.01
1302	2	1	1.00	1.00	1.00
1924	3	5	.01	.84	3.20
2006	2	7	.02	.02	.08
2007	1	2	.02	.02	.03
2103	3	44	.02	.02	.04
2303	2	1	.20	.20	.20
2501	3	13	nil	nil	.03
2809	2	1	.01	.01	.01
3003	2	1	.01	.01	.01
3005	2	1	.05	.05	.05
3021	3	7	.03	.03	.07
3301	1	6	.03	.03	.04
3311	3	25	nil	.07	1.60

(continued on next page)

TABLE 12-2 (Continued)

Plant ID	Data* Source	Number Obs:	Concentration CN,T Median	Avg.	Max.
3315	2 & 3	7(m)	4.30 mg/l	4.26 mg/l	9.90 mg/l
3320	2 & 3	26	.01	02	.16
3601	1 & 3	2	.03	.03	.03
3612	3	89	.02	.02	.02
4045	4	3	8.70	10.10	15.20
5021	4	3	.01	.01	.01
6037	2,3,& 4	11	.53	1.62	12.60
6072	4	2	.01	.01	.01
6073	4	3	3.08	3.29	5.18
6075	4	3	.01	.01	.01
6084	4	3	.44	1.09	2.80
6085	4	3	.96	1.23	1.80
6089	4	3	.43	1.04	2.42
6381	4	3	.04	.38	.98
9026	4	3	.03	.04	.08
10020	4	3	5.30	5.70	7.40
15070	4	3	.03	.11	.29
20073	4	6	.08	.12	.37
20077	4	6	2.20	1.90	3.00
20078	4	6	.01	.01	.04
20079	4	6	.01	3.51	21.00
20080	4	6	.01	.23	1.23
20081	4	7	.07	.87	3.82
20082	4	6	.83	1.47	3.31
20084	4	2	34.70	34.70	50.50
20086	4	3	1.13	2.37	5.25
20087	4	3	3.50	18.36	50.00
31021	4	3	.16	.26	.35
33024	3 & 4	15	nil	.01	.08
33070	4	3	.07	.07	.10
33073	4	3	.13	.13	.25
36041	4	3	.40	.42	.60

*1 = Data from reports by Yost et al., and Safranek et al.
2 = Batelle
3 = Plant
4 = Hamilton Standard
m = Monthly average data.

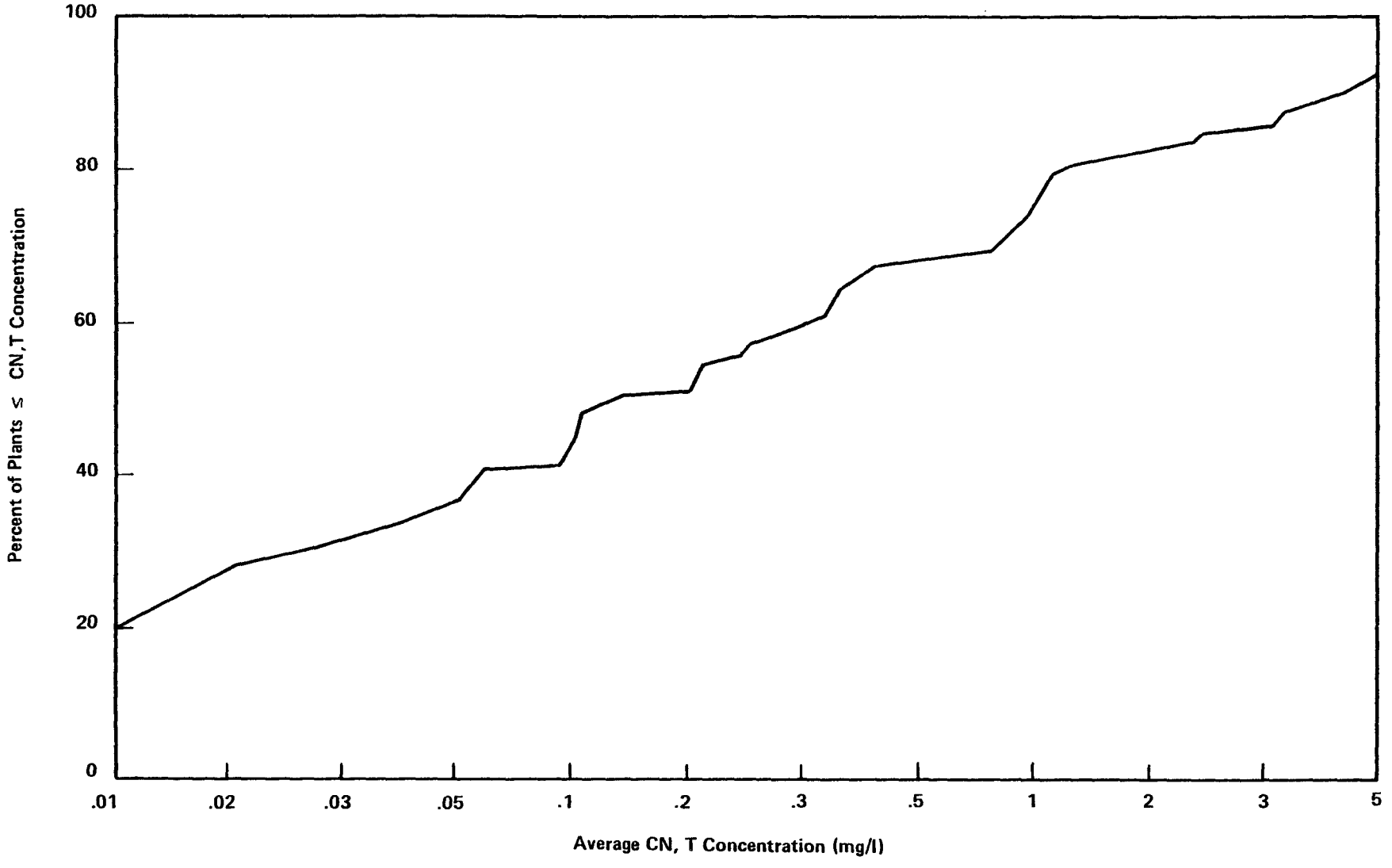

FIGURE 12-2

CUMULATIVE PLOT OF AVERAGE CN,T IN DISCHARGES FROM 69 PLANTS

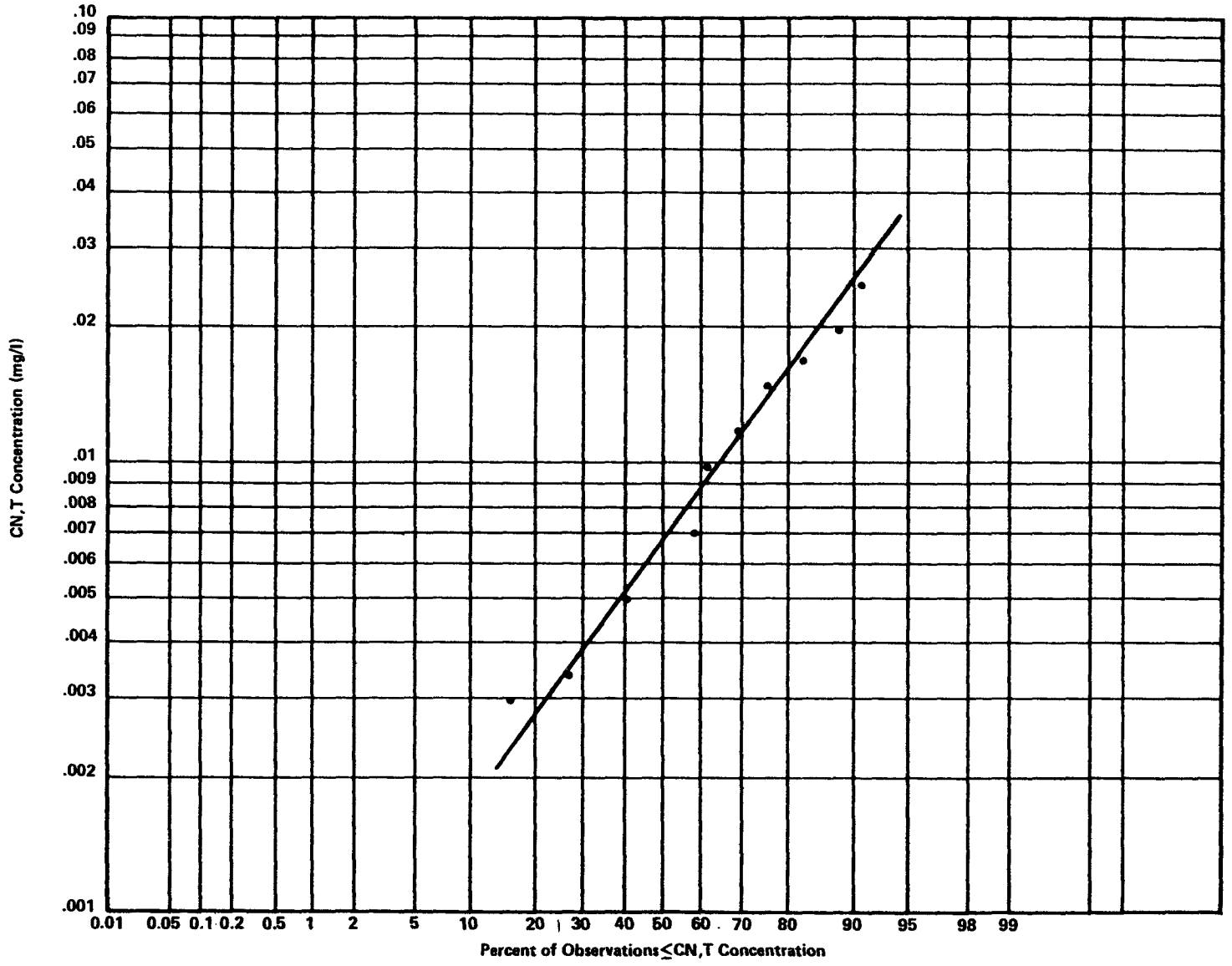

FIGURE 12-3

CUMULATIVE DISTRIBUTION OF 24 DAILY CN, T DISCHARGE CONCENTRATIONS FROM PLANT 3320

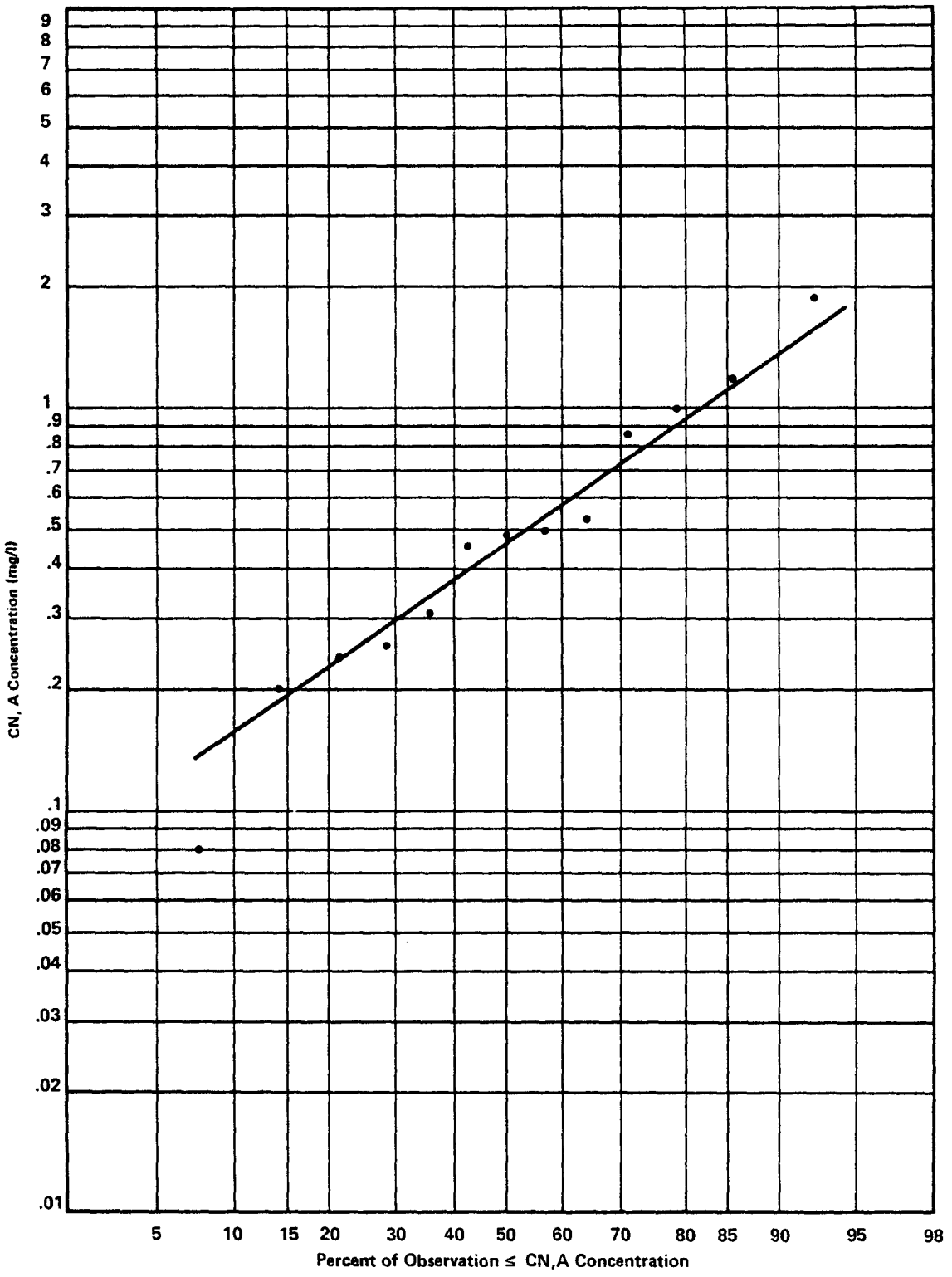

FIGURE 12-4

CUMULATIVE DISTRIBUTION OF 13 DAILY CN, A DISCHARGE CONCENTRATIONS FROM PLANT 1108

The individual plant Sigmas and variability factors for CN,A and CN,T are listed in Table 12-3 and Table 12-4, respectively. The daily variability factors for both CN,A and CN,T were found to be 5.0. The 30-day-average variability factors were calculated to be 1.5 for both CN,A and CN,T, using the daily variability factor above, Equation [2], and Appendix XII-A.2.

Calculation of the Limitations

Multiplying the long term averages of 0.15 mg/l for CN,T and 0.07 mg/l for CN,A by the appropriate variability factors above gives the resulting limitations:

	30-Day-Avg.	Daily Max.
CN,T	0.23	0.78
CN,A	0.11	0.35

A plant maintaining average CN,A concentrations less than or equal to the above long term averages would be expected to exceed these limitations less than one percent of the time.

AMENABLE CYANIDE (CN,A) TREATMENT FOR SMALL PLATERS

Plants discharging less than 10,000 gal./day (i.e., small platers) of electroplating process waste water are not subject to limitations on copper, nickel, chromium, and zinc. Consequently, solids removal equipment such as clarifiers or filters may not be used at these plants. Several commenters to the proposed regulations have claimed that solids removal equipment, if present, may enhance the apparent performance of cyanide treatment by incidently removing cyanide along with the metals.

To study this effect, clarifier influent data for a subset of the plants used in the cyanide analysis were analyzed. The data in this subset, listed in Table 12-5, were taken after cyanide oxidation but prior to metals removal. Lancy or Integrated plants (6087, 19051) and plants designated by NAMF (6051, 6079, 6081, 19050, 36040) which were used in this analysis in the Development Document for proposed regulations, were removed for reasons specified in the previous section. Also, four plants (6072, 20081, 20087, and 33073) were removed because the data were insufficient to determine CN,A concentration after cyanide oxidation.

The median or long term average CN,A concentration of these data is 1.0 mg/l, substantially higher than the long term average calculated for the same plants with data taken after metals removal. The mechanism for this effect is unknown, although several theories have been suggested; however, the effect is significant. Since

TABLE 12-3

PLANT SUMMARY STATISTICS AND VARIABILITY FACTORS FOR CN,A

Plant ID	No. of Obs.	Mean Log C*	Std. Dev. Log C	VF**
15	11	-0.26	.590	9.4
19	11	-0.38	.362	4.9
804	14	-2.15	.856	14.1
1108	13	-0.34	.369	5.0
2001	114	-1.40	.101	1.4+
2103	13	-1.87	.176	2.4
Median			.366	5.0

*Concentration of CN,A in mg/l.

**Variability factor for each plant calculated using Equation [1], except as noted below.

+Variability factor determined empirically, i.e., using 99th percentile of observations divided by the mean.

TABLE 12-4

PLANT SUMMARY STATISTICS AND VARIABILITY FACTORS FOR CN,T

Plant ID	No. of Obs.	Mean Log C*	Std. Dev. Log C	VF**
15	11	0.22	.410	5.8
19	11	-0.15	.240	3.1
116	37	-2.10	1.033	15.0
1108	13	0.01	.366	5.0
1208	37	-0.96	.291	3.8
2103	44	-1.86	.250	3.2
3320	24	-2.05	.486	7.2
Median			.366	5.0

*Concentration of CN,A in mg/1.

**Variability factor for each plant calculated using Equation [1].

TABLE 12-5

CLARIFIER INFLUENT CONCENTRATIONS OBSERVED FROM PLANTS USED IN THE AMENABLE CYANIDE ANALYSIS FOR SMALL PLATERS

Plant ID	Number Obs.	Concentration CN,A Median	Avg.	Max.
4045	3	6.40 mg/l	7.23 mg/l	9.80 mg/l
5021	3	.45	.71	1.62
6037	2	4.54	4.54	8.42
6073	3	2.56	2.81	4.95
6075	2	.01	.01	.01
6084	1	1.16	1.16	1.16
6085	3	2.36	1.92	2.52
6089	3	.59	.68	1.16
6381	4	.42	.42	.64
9026	3	.60	.63	1.00
10020	3	7.69	5.22	7.80
15070	3	5.70	5.80	7.25
20073	6	.12	.12	.30
20077	6	.60	1.50	5.77
20078	6	.01	.01	.04
20079	6	1.50	2.03	5.00
20080	2	.25	.25	.50
20082	6	.81	.96	3.00
20084	2	3.25	3.25	5.50
20086	3	65.00	69.33	130.00
31021	3	.06	.30	.80
33024	1	1.05	1.05	1.05
33070	2	.14	.14	.27
36041	3	.10	.15	.25

smaller plants may not have to install metals removal technology, the proposed cyanide limit for small platers should not reflect the effect of metals removal systems used by large plants.

Use of the daily and 30-day-average variability factors calculated previously for CN,A (5.0 and 1.5, respectively) along with the above long-term average of 1.0 mg/l, yields the following CN,A limitations for small platers: daily maximum, 5.0 mg/l; 30-day-average maximum, 1.5 mg/l.

TREATMENT OF HEXAVALENT CHROMIUM (CR,VI)

Chromium in its hexavalent state is commonly present in the discharge from chromium plating, chromating, or from certain other surface finishing operations. A commonly used technology for the removal of Cr,VI involves the reduction of the chromium to its trivalent state by the addition of sulfur dioxide or bisulfite. These chemical agents are capable, under properly controlled conditions, of consistent and rapid removal of Cr,VI to an almost undetectable residual.

Technologies for treating chromium were detailed in chapter VII.

Calculation of the Long Term Average for Hexavalent Chromium (Cr,VI)

Observed concentrations of Cr,VI in the effluent of 70 plants having either chromium plating or chromating operations and treating their chromium wastes by reduction, were included in the data base. An effort was made to include in Table 12-6 all of the appropriate plants for which data were available. The data base included those plants visited during the recent EPA study effort, earlier plant information collected by the Agency, and other sources. A few plants were deliberately excluded, either because their treatment systems appeared to be functioning erratically or were being bypassed (e.g., plants 1902 and 33021), or because the available raw waste data indicated an average total chromium (Cr,T) concentration flowing into the reduction unit of less than 1 mg/l (e.g., plant 804). Lancy and Integrated plants (6053, 6358, 33074) and one plant with combined wastes (2811) were also excluded from the analysis of the Cr,VI limitations.

Figure 12-5 is a cumulative plot of the average Cr,VI effluent concentrations of the 70 plants of Table 12-6. It can be seen that more than half (54 percent) of these plants reported average Cr,VI levels less than or equal to 0.05 mg/l, and the median or long term average for Cr,VI is, in fact, 0.05 mg/l.

It should be emphasized that the averages plotted in Figure 12-5 include data from all plants, not just those with exemplary treatment. The reduction of Cr,VI is a chemical process, and no uncontrollable

TABLE 12-6

Cr,VI CONCENTRATIONS OBSERVED IN EFFLUENT FROM PLANTS WITH Cr PLATING OR CHROMATING OPERATIONS

Plant ID	Data Source*	Number Obs.	Concentration Cr,VI Median	Avg.	Max.
16	1	11	0.05 mg/l	0.05 mg/l	0.05 mg/l
17	1	11	.02	.02	.02
19	1	6	.05	.05	.05
21	1	11	.05	.05	.05
116	3	45	.31	.46	2.10
635	2	6	.06	.05	.07
805	2	19	.04	.09	.38
1108-a**	1	11	.02	.18	1.40
1108-b	3	133	nil	.01	.04
1113	1&2	10	.05	.05	.08
1209	2	8	.06	.07	.10
1924	3	9	.05	.05	.05
2001	3	116	.07	.07	.12
2006	3	119	.02	.04	.30
2007	1&3	3	.05	.04	.05
2013	2	5	nil	nil	nil
2024	2	6	.11	.11	.21
2103	3	13	.10	.09	.13
2501	2&3	14	.02	.03	.15
3009	2	1	.01	.01	.01
3301	1&3	18	.04	.05	.15
3306	2	7	.05	.05	.05
3311	3	25	.08	.13	.60
3315	3	53	.14	.17	.37
3320	3	22	.14	.17	.53
3601	3	3	.06	.05	.08
4301	2	2	.08	.08	.11
6051	4	1	.01	.01	.01
6073	4	1	.17	.17	.17
6074	4	3	.01	.01	.01
6076	4	3	.01	.01	.02
6078	4	2	.01	.01	.01
6079	4	3	.74	.77	.83
6083	4	3	.01	.01	.01
6084	4	3	.01	.01	.01
6085	4	3	.31	.66	1.42
6086	4	3	.03	.22	.63
6381	4	3	.08	.08	.13
6731	4	1	.13	.13	.13
12065	3&4	11	.02	.05	.18
15070	4	3	2.34	2.92	3.63

(continued on next page)

TABLE 12-6 (Continued)

Plant ID	Data Source*	Number Obs.	Concentration Cr,VI Median	Avg.	Max.
19063	4	3	.01 mg/l	.01 mg/l	.01 mg/l
20010	4	6	.01	.01	.01
20064	4	2	.01	.01	.01
20069	4	1	1.29	1.29	1.29
20070	4	7	.30	.22	.44
20073	4	6	.10	.10	.17
20077	4	5	.03	.02	.04
20078	4	6	.01	.03	.08
20079	4	6	.01	.01	.01
20080	4	7	.01	.01	.03
20081	4	7	.03	.25	.96
20082	4	6	.08	.11	.24
20083	4	6	2.85	5.35	14.10
20084	4	1	.05	.05	.05
20085	4	3	.01	.11	.33
20086	4	3	.42	.43	.77
20087	4	1	1.07	1.07	1.07
30050	4	1	.01	.01	.01
31020	4	1	.01	.01	.01
31021	4	3	.07	.05	.08
31050	4	1	.01	.01	.01
33024	3	14	nil	nil	.01
33070	4	3	.17	.13	.21
33073	4	3	.01	.01	.01
36040	4	3	.01	.01	.02
36041	4	3	.01	.07	.21
40061	4	2	.10	.10	.19
40062	4	2	.34	.34	.53
43003	4	1	.11	.11	.11

*1 = Data from reports by Yost et al., and Safranek et al.
2 = Battelle
3 = Plant
4 = Hamilton Standard.

**Plant 1108 was divided into two groups due to the large number of observations and the two different sources reporting data.

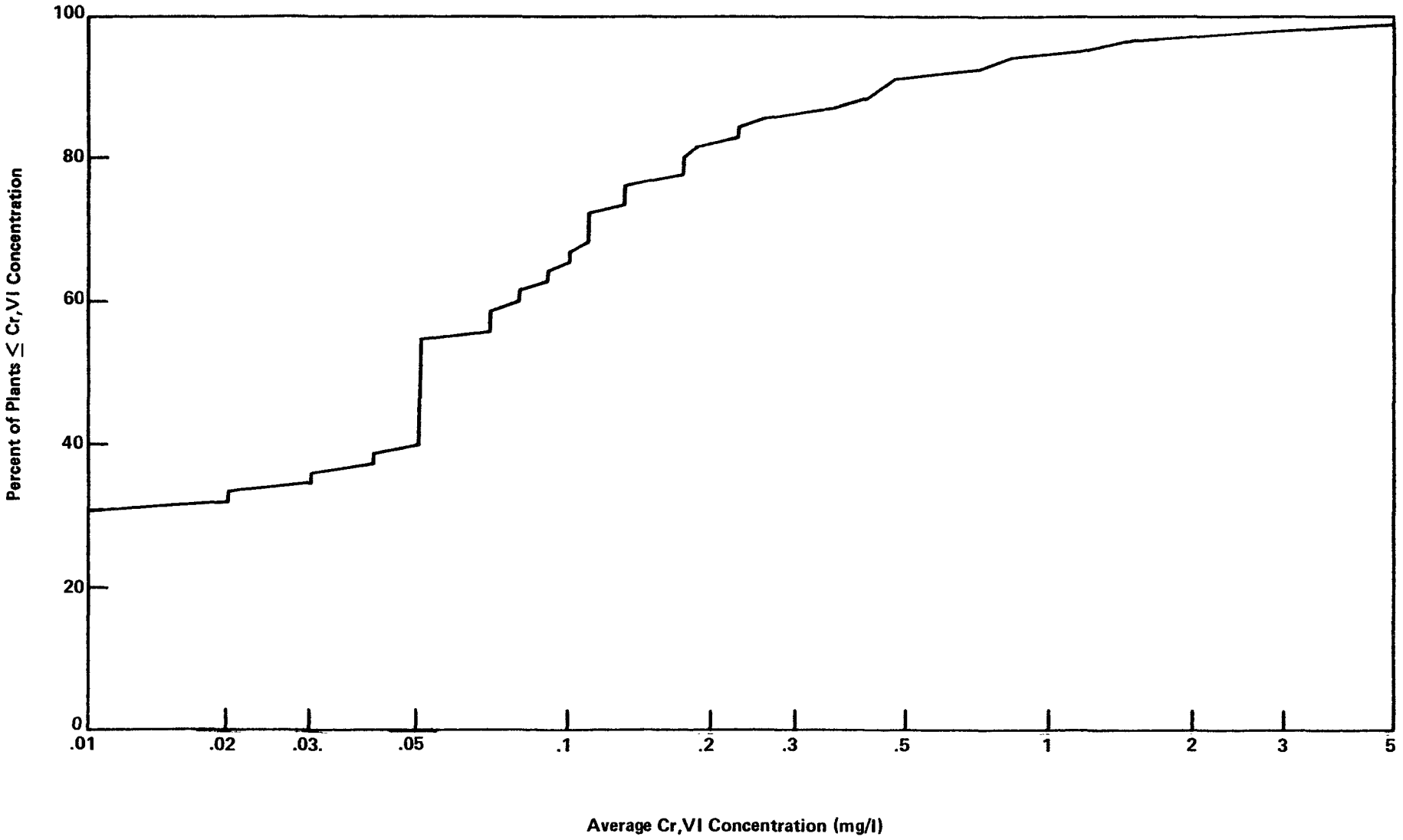

FIGURE 12-5

CUMULATIVE PLOT OF AVERAGE Cr,VI
IN DISCHARGES FROM 70 PLANTS

sources of interference with the completion of this reaction have been brought to our attention. Those plants in the data base whose average Cr,VI concentrations exceed 0.05 mg/l do not appear to have characteristics distinguishing them from the majority. No significant differences were found between job and captive shops or between direct and indirect dischargers.

Calculation of the Variability Factor

To allow for fluctuations in hexavalent chromium removal, variability factors were calculated as explained previously, based on the observation that the discharge concentrations of metals follow a standard lognormal distribution. Figure 12-6 shows a cumulative plot, on a log probability scale, of 45 daily observations of Cr,VI from plant 116. The data were nearly linear, indicating that the distribution of observations from this plant may be assumed consistent with lognormality.

The individual plant Sigmas and variability factors for Cr,VI are listed in Table 12-7. The median variability factor is 5.2. The 30-day variability factor, calculated from the median variability factor, Equation [2], and Appendix XII-A.2, is 1.5.

Calculation of the Limitations

Multiplying the long term average of 0.05 mg/l by the variability factors above gives daily and 30-day-average maximum limitations for Cr,VI of 0.26 and 0.08 mg/l, respectively.

METALS REMOVAL USING SEDIMENTATION FOR THE ELECTROPLATING CATEGORY: CR,T, CU, NI, ZN, CD, PB, AG

This analysis is based on data from a subset of 25 plants sampled by the Agency.[4] The results of the statistical analysis of the analytical sample demonstrate that the variability in metal concentration in clarifier discharges is related to:

1. the amount of TSS discharged from the treatment system, and

---

[4]The sample includes those electroplating and metal finishing plants that used precipitation and settling for solids separation, and those that did not have electroless plating operations. For a listing of plant identification numbers and metals which they plate, see Exhibit B.1 in Appendix XII-B.

TABLE 12-7

PLANT SUMMARY STATISTICS AND VARIABILITY FACTORS
FOR Cr,VI

Plant ID	No. of Obs.	Mean Log C*	St. Dev. Log C*	VF**
116	45	-0.52	.439	6.3
805	19	-1.19	.354	4.8
1108-a	13	-1.39	.584	9.2
1108-b	133	-2.04	.326	4.3
1113	10	-1.59	.269	3.5
2001	116	-1.24	.280	1.8
2006	119	-1.78	.685	6.2
2103	13	-1.04	.112	1.8
3301	18	-1.48	.361	4.9
3311	25	-1.04	.400	5.6
3315	53	-0.92	.402	5.6
3320	22	-0.92	.394	5.5
Median				5.2

*Concentration (mg/l).

**Variability factor calculated using Equation [1] for those plants with less than 100 observations or using the 99th percentile over the observed average for those plants with 100 or more observations.

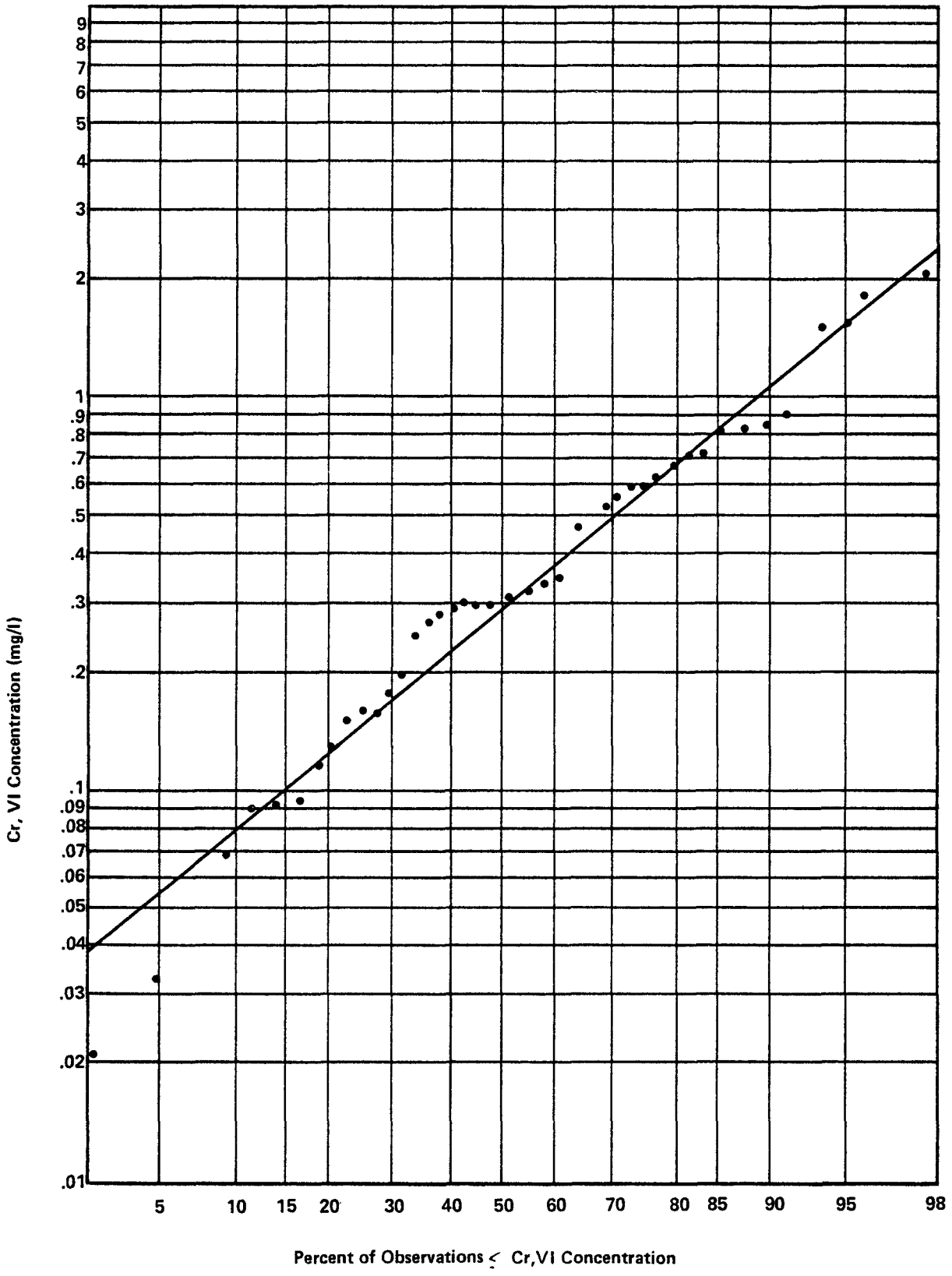

FIGURE 12-6
CUMULATIVE DISTRIBUTION OF 45 DAILY Cr, VI
DISCHARGE CONCENTRATIONS FROM PLANT 116

2. the ratio of the metal to the total metals in the raw waste load which goes to the pretreatment system.

Factors Influencing Individual Metal Effluent Concentrations

A series of exploratory statistical analyses were conducted to determine which measured attributes of the plant and treatment systems influenced the concentration of particular metals in the clarifier discharge. The data used in the analyses were average values for each plant; thus, each plant's performance was given equal weight. When a particular metal was under consideration, only those plants that were known to use that metal were included. The metal discharges studied in this way were Cr,T, Cu, Ni, Zn, Cd, and Pb.

The analyses of the relationships between discharge metal concentrations and the effluent and raw waste streams were made using the method of multiple regression. The regressions showed that the concentration of a given metal in the clarifier discharge is significantly related to three variables: the concentration of TSS in the clarifier discharge (effluent); the concentration of the same metal in the raw waste load (RWL); and the total concentration in the RWL of all metals which would precipitate as hydroxides at a pH greater than 7.5.

The following model describes this relationship:

$$\text{Log Me} = A + B \text{ Log TSS} + C \text{ Log Me}^{o} + D \text{ Log PM} \qquad [5]$$

where

Me = the concentration (mg/l) of a specific metal in the discharge

TSS = the concentration (mg/l) of TSS in the discharge

Me^{o} = the concentration (mg/l) of the specific metal in the raw waste load

PM = the concentration (mg/l) of total precipitable metal in the raw waste load.[5]

The regressions were performed on the logarithm of the variables. This made the distribution of the residuals (the difference between the observed and the predicted values of the dependent variable) more normal than would result from use of raw data values.

---

[5]Cu + Cr,T + Ni + Pb + Cd + Ag + Hg + Sn + Fe.

The values for the coefficients A, B, C, and D which provide the best fit for the data on each of the individual metals (Cr,T, Cu, Ni, Zn), are shown in Table 12-8. This table also gives the coefficient of multiple determination (R^2) for each regression (the fraction of the total variance in the data accounted for by the regression).

Equation [5], above, can be simplified to Equation [6], below:

$$\text{Log Me} = A + B \text{ Log TSS} + C \text{ Log Xme} \qquad [6]$$

where

$$\text{Xme} = \text{Me}^{o}/\text{PM}.$$

The values for the new coefficients A, B, and C, which provide the best fit, are given in Table 12-9. The effect of making the change from Equation [5] to Equation [6] is small because the coefficients C and D in Equation [5] are approximately the same magnitude, but of opposite sign. (See Table 12-8.) Thus, the fit to the data of the second model (Equation [6]) is nearly as close as for the first model (Equation [5]), as can be seen by comparing the R^2 values[6] in Tables 12-8 and 12-9. A "group average" fit was also constructed for the Me, TSS, and Xme observations of all four metals combined into a single group of 80 observations. The corresponding average equation is:

$$\text{Log Me} = -0.33 + 0.55 \log \text{TSS} + 0.65 \log \text{Xme} \qquad [7]$$

This equation is for metal and TSS concentrations expressed in mg/l. Table 12-10 shows that for average values of the logarithms of TSS and Xme for each of the four metals, the regression models of Equations [6] and [7] yield estimates of metal discharge concentrations that are roughly comparable and generally greater than the observed median concentration for the plants plating these metals.

There is a physical explanation for the concentration of a given metal in the discharge being a statistical function of the amount of TSS and the ratio of the given metal to total precipitable metals entering the clarifier. A plant discharge will normally contain metals both as the dissolved species and as a component of the TSS. When a particular metal is predominantly in solution and the precipitate has the form of a solid solution of mixed metal hydroxides, one might expect its concentration to depend on the fraction of metal in the precipitate derived from the RWL. Alternately, if the effluent metals are predominantly TSS precipitate, one might expect the amount of a given

---

[6]Specifically those for Cu, Ni, Cr,T, Zn.

TABLE 12-8

REGRESSION FIT OF AVERAGE METAL SPECIES DISCHARGED (mg/l) FROM 25 PLANTS WITH CLARIFIER SYSTEMS USING EQUATION [5]

Model (1): $\text{Log Me} = A + B \text{ Log TSS} + C \text{ Log Me}^{o} + D \text{ Log PM}$

Metal Species	No. of Plants	Coefficients of Best Fit A	B	C	D	R^2
Cr,T	22	-.04	.50	.80	-.88	.55
Cu	19	-.35	.78	.59	-.74	.67
Ni	21	-.39	.85	.29	-.55	.45
Zn	18	-.15	.23	.68	-.57	.43

Me = Average concentration (mg/l) of given metal in the effluent.

TSS = Average total suspended solids (mg/l) in the effluent.

Me^{o} = Average concentration (mg/l) of given metal in the raw waste load.

PM = Cu + Cr,T + Zn + Ni + Pb + Cd + Ag + Hg + Sn + Fe.

A,B,C,D = Regression coefficients.

R^2 = Square of multiple correlation coefficient.

TABLE 12-9

REGRESSION FIT OF AVERAGE METAL SPECIES DISCHARGED (mg/l) FROM 25 PLANTS WITH CLARIFIER SYSTEMS USING EQUATION [6]

Model (2): Log Me = A + B Log TSS + C Log Xme

Metal Species	No. of Plants	Coefficients of Best Fit A	B	C	R^2
Cr,T	22	-.20	.50	.81	.55
Cu	19	-.41	.66	.66	.67
Ni	21	-.76	.73	.27	.40
Zn	18	-.02	.29	.67	.42
Group Ave.*	80	-.33	.55	.65	.51
TRM**	25	-.18	.59	.69	.33

Me = Concentration (mg/l) of given metal in the effluent.

TSS = Total suspended solids (mg/l) in the effluent.

Xme = Ratio of the given metal to total metals (PM) in the raw waste load.

A,B,C = Regression coefficients.

R^2 = Square of multiple correlation coefficient.

*A regression performed on the four metals combined into a single group.

**TRM (Total Regulated Metals) = Cr,T + Cu + Ni + Zn.

TABLE 12-10

METAL CONCENTRATIONS PREDICTED BY EQUATION [6] AND EQUATION [7] AT AVERAGE VALUES OF TSS AND Xme

Metal	Predicted Concentrations+ (mg/l) Equation [6]*	Equation [7]	Observed Median** (mg/l)
Cr,T	.69	.81	.70
Cu	.82	.72	.48
Ni	1.19	.94	1.10
Zn	.74	.90	.75

+For the following average values of the logarithms of TSS (mg/l) and Xme for each plant.

	Log TSS	Log Xme
Cr,T	1.40	-.82
Cu	1.32	-.83
Ni	1.41	-.73
Zn	1.44	-.78

*With coefficients for the respective metals shown in Table 12-9.

**Median of the observed plants plating the given metal.

metal discharged to depend strongly on both the amount of TSS and of the fraction of given metal in the total metals entering the TSS.

Total Regulated Metals

The sum of copper, total chromium, nickel, and zinc in the clarifier discharge, designated by "TRM", or total regulated metals, also shows a functional dependence on TSS and on a new variable Xm (the sum of the Xme's of the four metals), which is similar to that found for the individual metals. Application of a regression model of the form of Equation [6] to the sum of metals data from the 25 plants yields:

$$\log TRM = -0.18 + 0.59 \log TSS + 0.69 \log Xm \qquad [8]$$

This equation is for metal concentrations expressed in mg/l, with the square of the multiple correlation coefficient (R^2) equal to 0.33.

Validity of Regressions

Before the above equations can be used with confidence, several tests of their validity and stability must be made. Major points to be considered are:

1. Are the apparent positive correlations between Me and TSS and Xme (and between TRM and TSS and Xm) an artifact of the use of the regression methodology?

2. Do they depend on the presence in the data base of one or two (possibly atypical) plants, i.e., are regression results stable?

3. Do the equations fit the data?

4. Are the results sensitive to any other factors?

Correlations Between Variables. To resolve the first of these questions, nonparametric tests for correlation between effluent metal concentration and TSS and Xme were made. The tests were independent of the distributional assumptions inherent in the use of the multiple regression equations. The Spearmen's Rho, a measure of correlation based on the ranking of the observations, showed positive correlations between Me and TSS and between Me and Xme, for each of the four metals as well as for total regulated metals.

Stability of Regressions. The stability of the regression predictions over the combination of plants selected for consideration was investigated by systematically removing all possible pairs of plants from the data base, and observing whether the predicted metal concentrations (for a given TSS and Xme) changed markedly. No pair of

plants, when removed from the regression, was found to have a dramatic impact on the predicted Me. Plants 20010 and 33024 had among the highest impacts on the predictions for all metals. Even so, deletion of these plants from the data base brought about only an 8 to 24 percent increase (depending on the specific metal under consideration) in the predicted effluent metal concentrations (predicted for TSS = 25 mg/l and Xme = the median value for each metal). This small effect shows that the predictions of discharge metal concentration are stable and do not depend strongly on the observations from any pair of plants.

Test of Fit. Figure 12-7 displays, for Equation [7], contours of constant expected metal concentration, Cme, as a function of discharge TSS and of Xme. These contours are plots of the TSS and Xme values obtained by holding Me in Equation [7] constant for each of the Cme values indicated in Figure 12-7. The region under any given curved line is the region of clarifier TSS discharge and of RWL metal fraction for which the concentration of metal discharge is expected to be less than the line's value. For example, Figure 12-7 illustrates that the concentration of a metal discharged from a clarifier with 25 mg/l TSS and Xme = 0.2 in the RWL is expected to be slightly less than 1 mg/l.

The observed metal concentrations discharged by the 25 plants should be compared with those predicted in Figure 12-7. Figure 12-8 is a plot of the same form as Figure 12-7, with only the 1 mg/l contour shown. The points on this figure are the TSS and Xme of each metal discharged by the 25 plants. It can be seen that most of the observations fall in the appropriate areas, relative to the predicted 1 mg/l line. Eighty-five (85) percent of those cases with actual discharge metal concentration less than or equal to 1 mg/l fall, as predicted, below the curve, while 70 percent of those cases with actual discharge metal concentration greater than 1 mg/l fall above the curve.

Sensitivity of Results to Neutralization Agent. As a general practice, either lime or caustic is added to the waste stream to precipitate metals before clarification. In the plants in the data base, the choice of lime was associated with significantly lower effluent metal concentrations. For the seven plants using lime, the median concentration of total regulated metal was 2 mg/l. For the remaining 18 plants, the median was 5.1 mg/l. Similar effects were observed for individual metals, with the apparent drop in effluent concentration most pronounced for Ni and Cu. The seven plants using lime appeared otherwise typical of the plants in the data base, having similar values of effluent flow, TSS, RWL metal concentration, and area plated.

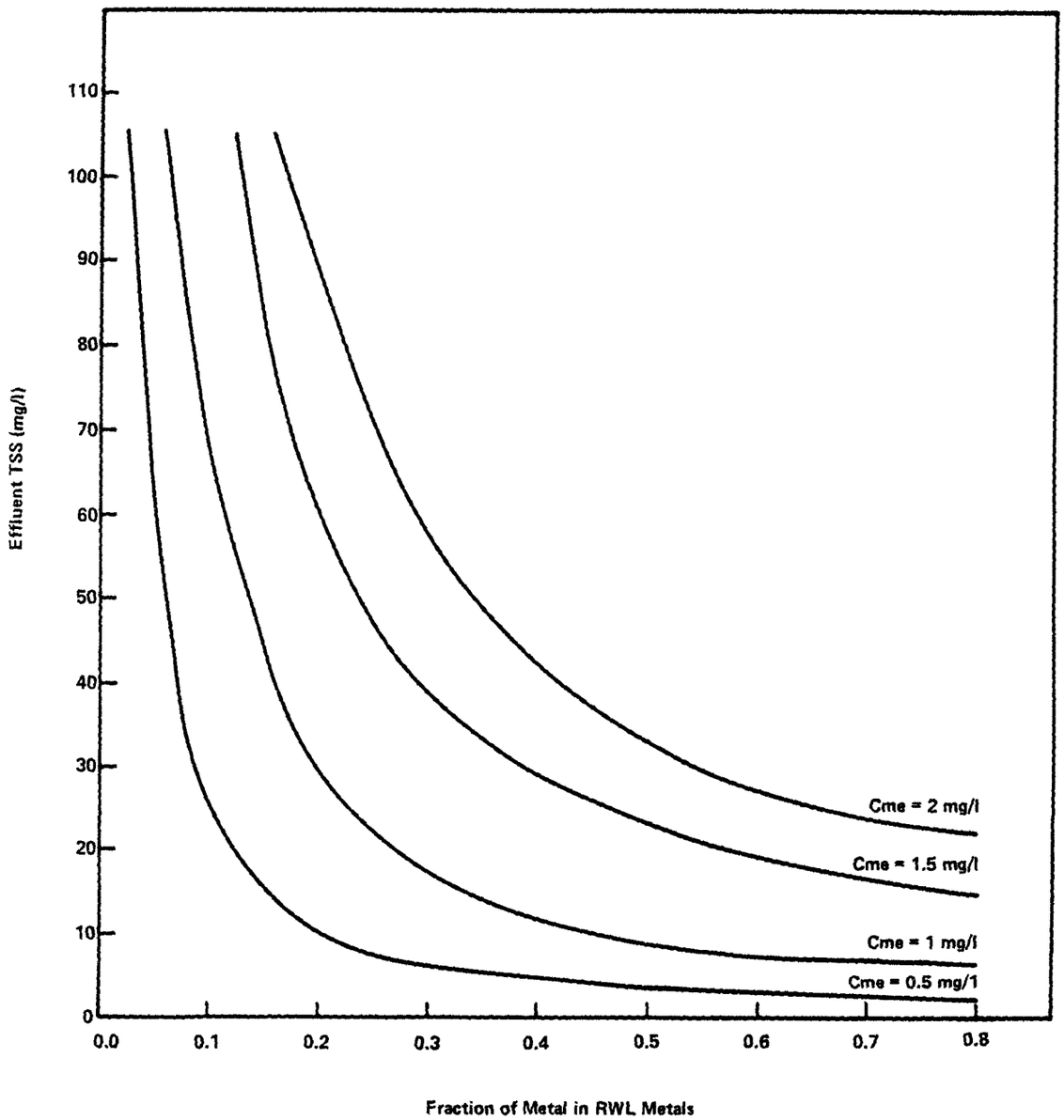

FIGURE 12-7

CONTOURS OF CONSTANT EXPECTED DISCHARGE METAL CONCENTRATION (Cme) AS A FUNCTION OF TSS AND Xme

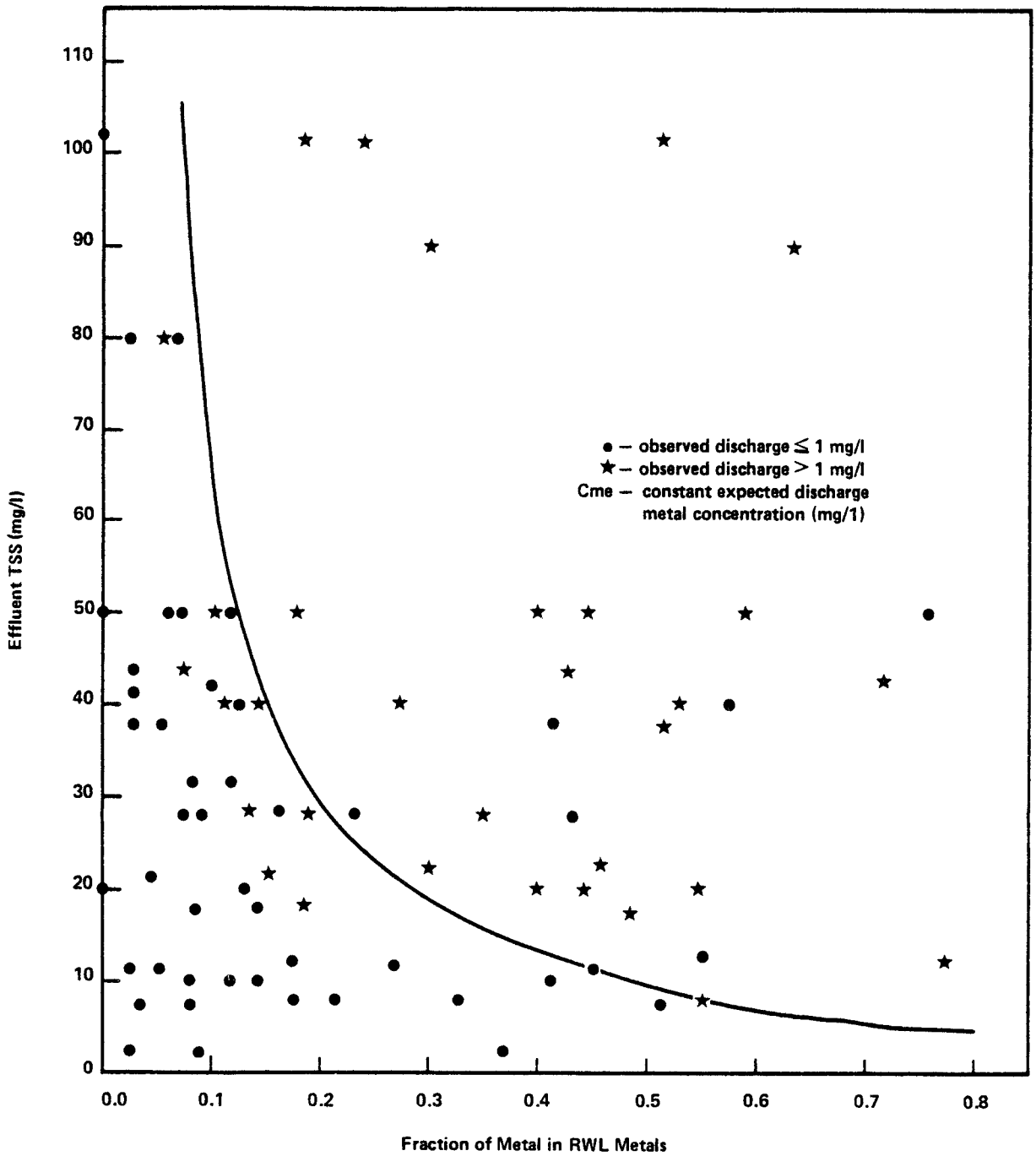

FIGURE 12-8

COMPARISON OF OBSERVED DISCHARGE METAL CONCENTRATION VS Cme = 1 mg/l CONTOUR

Sensitivity of Results to Flow. Since the quantity, in pounds/day, of metal discharged to the sewer is dependent on the effluent flow, it is important to determine whether flow and discharge concentration are related. Although the three plants with the lowest flows have above-average total regulated metal concentrations, the data presented below show that there is little evidence of any consistent relationship between flow and concentration.

Number Plants	Median TRM(mg/l)	Median Flow(gal./hr.)
3	20.8	230
7	2.3	2100
7	1.5	3100
6	5.8	6000
2	3.2	19000

Sensitivity of Results to Plant Size. Two measures of plant size have been considered: the total number of employees, and the plating rate (op-m^2/hr). No consistent trend in total regulated metal concentration was noted for either case.

Sensitivity of Results to pH. Of the 25 plants considered, 6 had average pH values less than or equal to 8.5. At a pH below this value, the solubility of Ni exceeds that of its pure hydroxide by more than 10 mg/l. Accordingly, the discharge from a clarifier at a pH less than or equal to 8.5 might contain comparatively high concentrations of Ni, if the relative insolubility of the pure hydroxide limits metal removal. However, this did not appear to be the case. There were five plants which plated Ni and which discharged at an average pH not greater than 8.5; four of these had RWL Ni concentrations in excess of 5 mg/l. However, the average effluent Ni concentration for these four plants was only 1.1 mg/l, a value less than the median of all Ni plating plants in the sample.

The failure of these plating plants to discharge Ni at levels approximating the equilibrium solubility of the hydroxide indicates that some other factor controlled the solubility of the metal (e.g., presence of other metals). It is possible that the metal was precipitated in a less soluble form, such as carbonate, or that the nickel hydroxide was in solid solution with other hydroxides and had a lowered activity.

It was found that pH entered as a dependent variable in the regression equations for the individual metals or total regulated metals did not add a statistically significant contribution to the correlation coefficient.

Sensitivity of Results to RWL Cu. In comments to EPA, one respondent reported the results of his laboratory studies on the solubility of Cu in alkaline solutions, which were derived from copper plating baths and which had been treated to remove cyanide. He reported that the apparent Cu solubility increased markedly with higher initial Cu concentrations in the treated solution. He also stated that Zn and Ni solubilities increased in solutions mixed with treated Cu plating solution.

The data indicated that, for the solutions and the treatment procedures used, the apparent Cu solubility increased as the 1.5 to 2 power of the initial Cu concentration, for initial Cu concentrations in the range of 50 to 1,000 mg/l. There have been various explanations to account for such a dramatic increase in apparent Cu solubility at high initial Cu levels and for the reported increases in Zn and Ni solubility; the presence of an unspecified complexing agent, stable to the experiment's cyanide removal procedures in the Cu plating baths studied, would seem to explain much of the phenomenon. Complete data on the compositions of these baths were not furnished to EPA.

The Agency has not been able to verify this laboratory effect with available data. The minimum initial Cu studied was 50 mg/l, and the effects reported were most noticeable at initial Cu's in excess of 200 mg/l. These concentrations were well above those normally encountered; only three plants of our sample reported average raw waste load Cu's greater than 50 mg/l, and the maximum average RWL Cu was 125 mg/l.

The addition of a log RWL Cu term to the regressions of Equation [6] yielded no significant increase in explanatory power. (In fact, for three of the four metals, the coefficient was negative, indicating a negative correlation of discharge concentration with RWL Cu.) Furthermore, no significant differences were found between the observed Cu concentrations of the seven daily observations with RWL Cu greater than 50 mg/l and the predicted Cu concentrations derived from the regression equation of Table 12-9. Thus, it appears that under the operating conditions of the sample plants, the RWL Cu concentration affects the discharged metal concentration only insofar as it affects Xme.

Derivation of Limitations

To summarize, models of the form of Equation [6] have been found to describe the dependence of the average effluent metal concentrations on TSS and Xme. The coefficients of Equation [6] that best describe the behavior of the individual metals are summarized in Table 12-9 (above). Equation [7], of the same form as [6], is derived to give an overall fit to the average concentration data of all individual metals

without regard to species. Equation [8] describes the dependence of the average concentration of the Total Regulated Metals on TSS and Xm.

These equations can be used to determine guideline limitations on average effluent metal concentrations, provided that levels of TSS and Xme which are technically attainable by a metal finisher can be specified. The metal finisher must properly control his wastes and employ a well-designed and operated clarification system. The following sections of this analysis will discuss four factors in the determination of guideline limitations. They are: TSS concentrations, Xme values, the application of the appropriate equations for estimation of long term average metal concentrations, and factors to allow for daily variability about the long term average concentration.

Variation in TSS

The average TSS concentrations discharged from the 25 sampled plants ranged from 2 to 120 mg/l, with a median of 28 mg/l. This wide range of average TSS concentrations reflects a corresponding diversity in clarifier design and operating procedures. The clarification systems employed by the 25 plants included lamella clarifiers (plant 3102), tube settlers (20082), and settling tanks or clarifiers. The retention times, design parameters denoting the average time available for a solid particle to settle out, varied from 0.8 hr. (6037) to 48 hrs. (20084). It should be remembered that the plants of this study were not selected for exemplary clarifier operation and design; in fact, for some of the plants, the retention operating procedures and controls also impacted the level and stability of clarifier performance. Such procedures could include the careful selection and addition of polymeric coagulants and co-precipitating metals (Fe or Al) before clarification, and the recycling of aged sludge to the precipitation tank to serve as a nucleating agent. Control factors important to clarifier operation could include equalization of flow, RWL metal, and temperature in the clarifier influent and the avoidance of oily wastes. Though many of the above factors were not reported, the data base does indicate that an average TSS limitation of 20 to 25 mg/l is reasonable.

The data can be divided into two groups, those with some evidence of inadequate design or plant control, and those without this evidence.[7]

---

[7]Three measures of clarifier design and operation have been considered. They are:

(Continued)

The median TSS concentration for the former was 47 mg/l, the median for the latter was 18 mg/l. TSS separation by clarification is widely practiced in many industries, with levels of 20 to 30 mg/l being readily attained. A level of 25 mg/l appears reasonable for the metal finishing industry, and this TSS concentration will be used as the basis for estimating average attainable metal limits.

Variations in a Metal's Fraction in the RWL

The Xme for an individual metal in the waste from a plant can be controlled by reduction of the amount of the metal discharged to the RWL. This reduction of Xme can be accomplished by such management practices as dead rinses, fog rinses, and adequate draining of the finished material before rinsing. However, with such practices, the reduction of the Xme for one metal is accomplished at the expense of an increase in Xme for another.

A uniform reduction of Xme's for the regulated metals can be obtained by the addition of an unregulated metal (such as Fe or Al) either deliberately or by solution of the basis metal during cleaning steps. Addition of such a metal should bring about some reduction in the discharge concentration of regulated metals, particularly if the added metal also serves as a coagulant for the precipitated TSS solids.

(Continued)

1. Retention time, as indicative of clarifier design. The median retention time of the 19 plants that reported the parameter was six hours.

2. Oil and grease effluent concentration, as indicative of a problem which is at least partially controllable by plant practices. Oil concentrations can be reduced by segregation or by emulsion breaking followed by separation (plant 6074). The median effluent oil and grease concentration of the 23 plants with data was under 3 mg/l.

3. Temperature differential between the clarifier discharge and its influent can result in convective stirring and reduction in clarifier settling efficiency, particularly if the entering stream is warmer than the body of liquid in the clarifier tank. Those plants which had retention times less than or equal to 3 hours, effluent oil and grease greater than or equal to 20 mg/l, or RWL temperature more than 2°C warmer than effluent temperature, were considered to have evidence of inadequate design or operational control.

To determine the range of Xme values typically encountered in the raw waste load of metal plating and finishing plants, the data base of 25 plants used in the previous analysis was supplemented by data from 22 additional plants (Appendix XII.B, Exhibit B.2). These latter plants, although not suitable for analysis of effluent metal concentrations (because of incomplete cyanide oxidation, use of filters, etc.) can be used for analysis of raw waste load metal loadings. Table 12-11 summarizes the distribution of Xme's encountered in the raw waste load of the combined 47 plant sample. The table also summarizes the distribution of the fraction Xm, as discussed above under total regulated metals.

As Table 12-11 shows, the Xme's for the individual metals vary over a wide range. Much of this variation probably reflects the diversity of plant practices. However, the Xme is also related to the number of metals plated within the plant.[8] For example, a plant which plates two metals will generally have a higher average Xme for these metals than a plant which plates four metals, simply because the two metals it plates generally make up a larger fraction of all the metals in the raw waste load. The relation of the average observed Xme for all metals to the number of metals plated can clearly be seen in Table 12-12. This table shows the average Xme attained by plants using a single metal to be 0.61, while the average Xme for plants plating or finishing with five different metals was 0.13. The 47 plants plated an average of 3.3 different metals and had an average Xme of 0.26.

ESTIMATION OF AVERAGE METAL CONCENTRATION

Equation [6] provides an estimate of the average effluent metal concentrations expressed as a function of TSS and Xme. The coefficients for this equation that give the best fit for the individual metals Cr,T, Cu, Ni, and Zn, are listed in Table 12-9. Accordingly, Equation [6], with Table 12-9 coefficients, will be used to derive average limits for each of the individual metals. Equation [8] was similarly constructed to fit the concentration of total regulated metals, and this equation was used to derive average limits for this total. Because of the small number of plants plating Cd or discharging Pb, it is not feasible to develop best fit equations for these metals. However, Equation [7] predicts, quite well (see Table 12-10 and Figure 12-7), the discharge concentrations of the metals for

[8] Includes such nonplating operations as chromating.

TABLE 12-11

DISTRIBUTION OF THE FRACTION OF METAL IN THE RAW WASTE LOAD TOTAL METALS DISCHARGED BY 47 METAL FINISHING PLANTS

Metal	Plants Using	Fraction metal (Xme) Median	75 percentile	Maximum
Cd	8	.05	.06	.10
Cr,T	37	.12	.52	.82
Cu	39	.14	.27	.72
Ni	40	.16	.40	.79
Pb*	11	.004	.015	.21
Zn	31	.21	.43	.71
TRM	47	.91	.96	1.000

*Plants with more than 0.5 mg/l Pb in RWL.

which adequate data were available. Therefore, this equation is used to derive average Cd and Pb limits as well.[9]

The above equations all express the given metal concentration in terms of the independent variables, TSS concentration and Xme. As discussed earlier, average TSS concentrations of 25 mg/l or less appear readily attainable by waste stream clarification. The choice of appropriate values of Xme to use for determination of metal limits is somewhat more complex because of the variation of attainable Xme's with the number of metals plated.

There appear to be two alternative approaches to setting Xme's for individual metals. First, the Xme distribution data of Table 12-11 can be used to find a point on the distribution which is far enough above the median to be attainable by most platers, regardless of the number of metals plated. Such a point could be the 75 percentile, which covers most cases, with the possible exception of plants plating a single metal.

The second approach is to consider the attainable levels of Xme for Cr, Cu, Ni, and Zn to be dependent only on the number of metals used in plating and finishing operations by the plant, independent of which metals are actually used. The Xme values derived would then be the demonstrated average Xme's of Table 12-12.

Table 12-13 summarizes the values of the average metal concentration excted for each metal using the two approaches. The table shows that metal concentrations based on a 75 percentile are usually greater than those based on a plant's using two or more metals in its plating and finishing processes but less than those based on a plant using a single metal. Either of these two alternative approaches appear to give average metal concentrations that can be achieved by all plants plating more than a single metal. The Table 12-13 long term average metal concentrations, based on the 75 percentile Xme values, will be used below in calculations of the daily maximum and 30-day-average limits for Cr,T, Cu, Ni, and Zn.

The above procedures for determining average metal concentrations have the following disadvantage. Since both procedures depend on the

---

[9]Equation [7], if applied to the three plants plating Cd, tends to overpredict the observed average Cd discharge concentration with an average error of 10 percent. The tendency of this equation to overpredict the observed concentrations is more marked in the case of the three Pb discharging plants; the average overprediction is about 65 percent.

TABLE 12-12

DEPENDENCE OF Xme ON THE NUMBER OF METALS USED IN PLATING AND FINISHING

Number Metals*	Number Plants	Average Xme
1	2	.61
2	11	.31
3	11	.28
4	16	.21
5	7	.13

*Number of metals plated. For plants plating a specific number of metals, see Exhibits B.1 and B.2 in Appendix XII-B.

TABLE 12-13

PREDICTED AVERAGE METAL CONCENTRATION*
IN DISCHARGE FROM PLANTS WITH 25 mg/l TSS

Number Metals Plated	Using Average Xme's of Table 12-12			Using 75 Percentile Xme's of Table 12-11**
	1	2	3	
Cd	-	-	-	0.4 mg/l
Cr,T	2.1 mg/l	1.2 mg/l	1.1 mg/l	1.9
Cu	2.3	1.5	1.4	1.4
Ni	1.6	1.3	1.3	1.4
Pb	-	-	-	0.2
Zn	1.7	1.1	1.0	1.4

*Based on Equation [7] for Cd and Pb. Based on Equation [6] with Table 12-9 coefficients for Cr,T, Cu, Ni, Zn.

**These values are the Long Term Averages (LTA) of the respective metals.

evaluation of an attainable Xme for each metal, the concentrations calculated on the basis of either the two-metal average or the 75 percentile will be too high (lenient) for most plants, which, on the average, plate more than two metals and for which most Xme's fall near the observed medians.

An additional limitation, based on total regulated metals, compensates for this problem. The value of the fraction of total regulated metals in the raw waste metals, Xm, is less dependent on the number of metals plated than are the individual Xme's. Additionally, Xm varies much less than the Xme's between the median observed value and the maximum observed value (from Xm = 0.91 to Xm = 1.0). As a result the percentile chosen has less influence on the calculation of TRM. The estimated long term average for total regulated metal concentration, using Equation [8] and assuming that TSS = 25 mg/l and Xm = 0.96, is 4.2 mg/l. This value will be used in calculations of the daily and 30-day-average maximum limits for TRM.

A total regulated metals limitation alone is insufficient because it does not prohibit continuous discharge by a plant plating only one metal (e.g., Cu) at concentrations above the limitation for that individual metal. This might be the case for a plant which plates only one or two metals, or for a plant which has difficulty controlling waste generation from one specific line. Therefore, each plant will be required to meet limitations on both the individual metals and on TRM.

Plants which plate only a single metal have been predicted by the preceeding analysis to have typically higher Xme values and hence higher effluent metal concentrations than plants which plate more than one metal. This prediction does not demonstrate, however, that a single-metal plater cannot meet the final regulations for the metal it plates.

First, the Agency has conducted an analysis which shows that EPA data-base plants with large Xme values (plants plating primarily a single metal) met the limitations for the metals they plated with approximately the same frequency as did other plants in the data base. However, this analysis should not be interpreted as a statement that the regression model does not apply. Specifically the model, which is a function of only two ariables, has been used to describe certain interactions among variables over a large range of circumstances. It is a representation of a norm which is an aggregate approximation in that the model does not fit any single case exactly. Single metal platers and those with excessively high metal rates are at the fringes of the region to which the model applies. In these circumstances there are other important factors, such as those cited below, which are not incorporated into the model directly. This consideration and other analyses described here indicate that the

model's predictive power is less accurate for single metal platers. The Agency used the model by evaluating it at specific combinations of the two independent variables resulting in appropriate standards for all platers.

Second, the Agency has found that of the nine Printed Circuit Board plants in the data base, none of which plated significant amounts of metals other than Cu, only two[10] failed to meet the daily limitation on Cu set for the Electroplating category.

Finally, engineering measures may be undertaken to improve metals removal whenever there is a relatively large amount of one metal in the waste stream. For example, the pH of the wastewater in a plant plating only one metal can be adjusted to optimize the treatment system for removal of that metal--an adjustment which cannot be easily made when more than one metal is involved.

Calculation of the Variability Factors

Some degree of fluctuation in the daily concentration and quantity of pollutants discharged from even a well equipped and operated treatment system appears to be unavoidable. The following two figures illustrate the day-to-day fluctuations usually observed in the output of a plant that discharges metals in its wastes. Figure 12-9 is a plot of the daily concentrations of total chromium reported over an 11 month period from the metal finishing operations of plant 20080. The operations consisted of Zn plating of steel wire, followed by chromate conversion coating. The chromium wastes were treated by reduction of Cr,VI to Cr,III, alkaline precipitation, and clarification. The average Cr,T discharge concentration over this period was 0.52 mg/l.

Figure 12-10 is a probability plot, on a logarithmic probability scale, of the data of Figure 12-9. The nearly linear form of this plot supports the assumption made earlier that the plant metal concentrations follow a lognormal distribution. The derivation of the variability factor equation is based on this assumption. Appendix XII-A.3 provides more data which tend to support the good fit of the lognormal distribution to the daily Cr,T, Cr, Ni, and Zn effluent values from a plant. Using the methodology and assumptions discussed earlier, the variability factors in Table 12-14 were calculated. The statistics for each plant and individual metal necessary to calculate VF are in Exhibit A.3 of Appendix XII-A.3. The 30-day-

[10]Plant 19063 failed on only 1 of 6 observations by less than 10%.

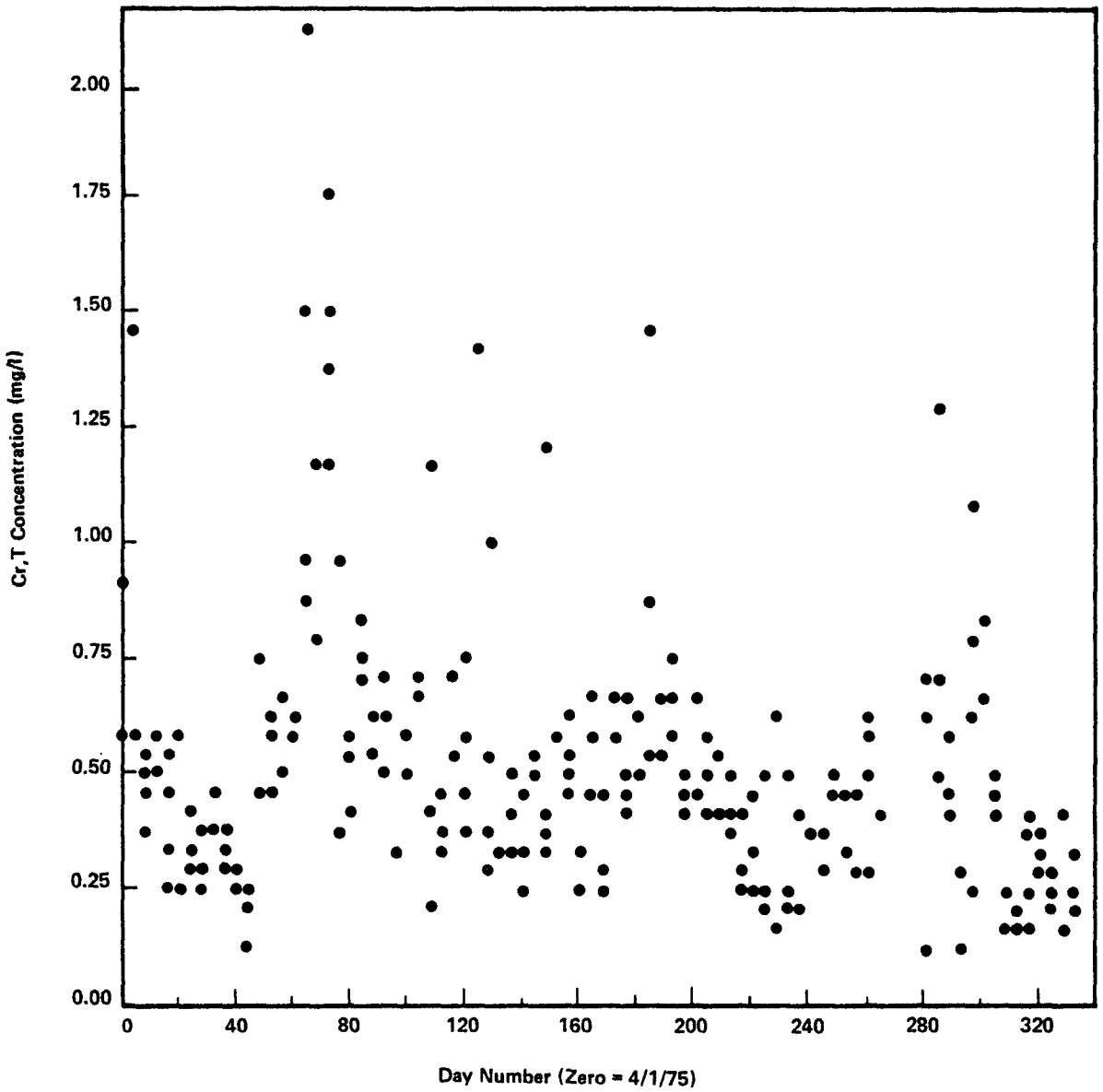

FIGURE 12-9

230 DAILY VALUES OF TOTAL
CHROMIUM (CR,T) CONCENTRATION FOR PLANT 2080

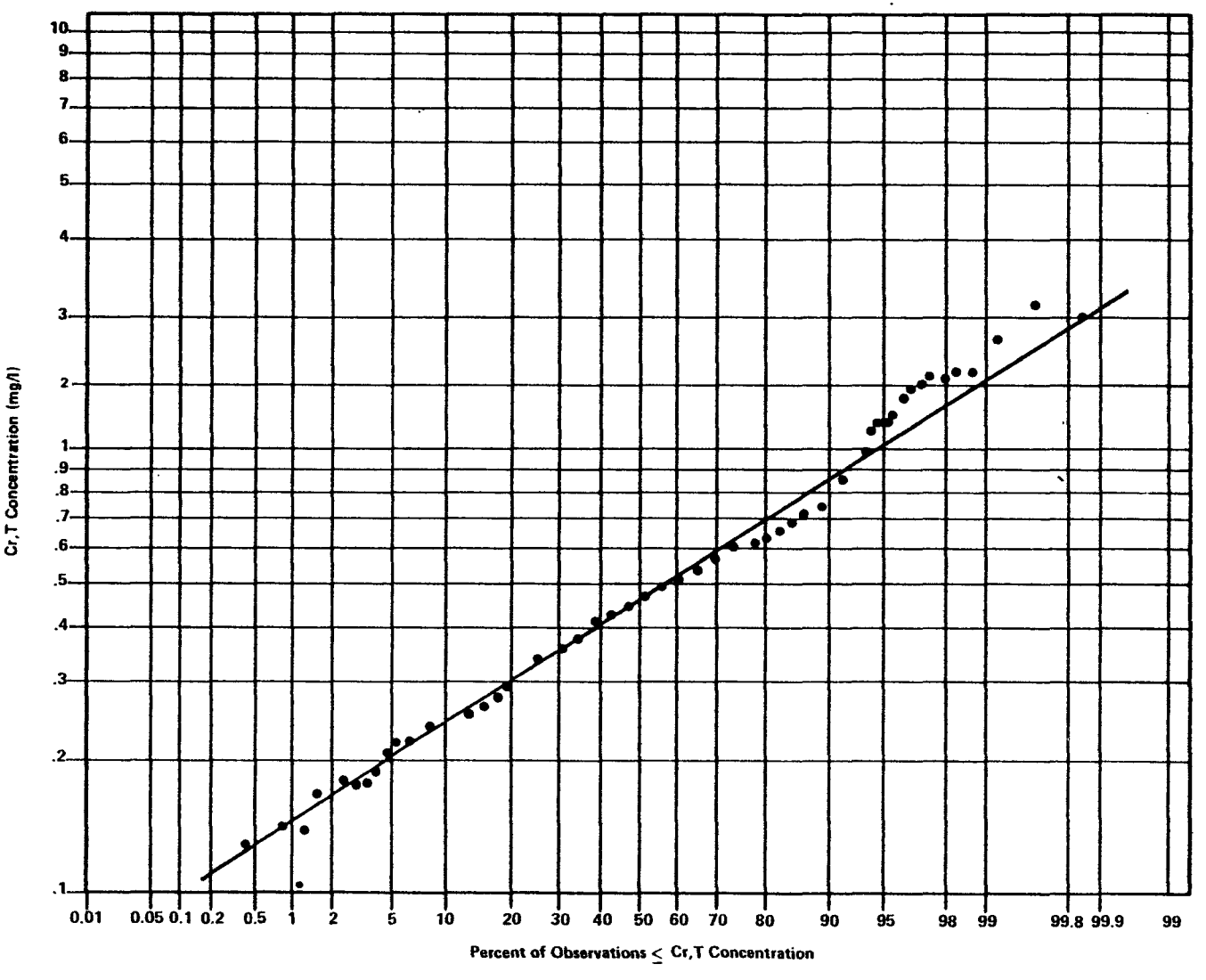

FIGURE 12-10

CUMULATIVE DISTRIBUTION OF 230
DAILY CHROMIUM (Cr,T) CONCENTRATIONS FOR PLANT 2080

TABLE 12-14

DAILY VARIABILITY FACTORS FOR ELECTROPLATING CATEGORY

Plant ID	No. of Obs.	Cu	Ni	Zn	Cr,T	Other*	TRM**
13	10	3.03	2.26	2.49	5.48	--	2.45
14	13	4.88	5.23	3.05	7.84	4.48	5.34
116	48	5.91	5.81	--	3.31	--	2.62
637	66	3.54	6.15	--	--	4.90	3.32
804	14	2.99	4.50	--	4.97	2.86	3.08
804	14	--	--	--	--	2.08	--
1108	133	2.38	2.93	2.64	3.97	2.64	2.19
1208	37	3.61	--	2.90	3.57	--	2.37
1570	82	--	--	2.36	2.26	--	1.84
1924	11	4.21	1.77	3.02	--	2.80	2.04
2001	116	2.26	--	1.40	--	2.55	1.38
2070	34	3.28	--	--	--	--	--
2080	230	--	--	4.11	2.87	--	2.80
2081	187	2.59	2.48	1.70	2.13	--	1.78
2088	65	3.69	2.40	3.60	2.49	--	1.90
2501	14	2.57	2.58	6.13	5.00	--	3.86
3301	22	7.23	4.39	13.34	5.99	7.49	7.98
3311	25	2.81	--	--	7.07	--	2.89
3315	53	2.15	2.52	--	3.83	--	1.87
3320	24	3.60	7.36	5.14	4.99	5.36	3.52
3324	14	2.45	--	3.51	2.82	--	--
	Median	3.2	2.9	3.0	3.9	2.9	2.5

*Other - Ag, Cd, Pb.

**TRM - Total Regulated Metals = Cu + Cr,T + Ni + Zn.

For Cu, Zn, Ag, Cd and Pb, the data used in the above calculations were those with daily observations of CN,A or CN,T concentration less than 1 mg/l. For Cr,T, all daily observations were used except for those with Cr,VI greater than 0.25 mg/l and with Cr,VI/Cr,T greater than or equal to 0.25.

If the number of observations is less than 100, the plant VF is computed using Equation [1].

If the number of observations is greater than or equal to 100, the plant VF is computed by dividing the 99th percentile of ranked data by the average value.

average variability factors were: 1.4 for Cr,T; 1.3 for Cu, Ni, Zn, Cd, Pb, and Ag; and 1.2 for Total Regulated Metals.

Silver Analysis

The Agency data file contains nine plants that carried out silver plating operations during the time of the sampling program. The observed silver concentrations in the effluents of these plants are listed in Table 12-15.

Of the nine plants listed in Table 12-15, three plants (6073, 6081, 6085) plated only a small quantity of Ag in comparison with their other operations, and thus, their RWL Ag concentrations were correspondingly quite small. Plant 6037, on the other hand, is a major Ag plater but had a CN,A level so high that very little of its RWL Ag was removed by waste treatment. The remaining five plants had Ag effluent concentrations of 0.14, 0.14, 0.42, 0.56, and 0.8 mg/l, respectively. Thus, the median or long term average for these Ag platers was 0.4 mg/l.

The variability factor of 2.8 for Ag comes from the column headed "Other" in Table 12-14. The 30-day-average variability factor of 1.2 was obtained using the variability factor of 2.8, Equation [2] and Appendix XII-A.2. Multiplying these variability factors by a long term average of 0.4 mg/l gives daily and 30-day-average maximum limits for Ag of 1.2 and 0.5 mg/l, respectively.

Calculation of Limitations

The following daily and 30-day-average maximum limitations were derived by multiplying the variability factors by the appropriate long term average concentrations.

Metal	Daily Max.	30-Day-Average Max.	Long Term Average
Ag	1.2 mg/l	0.5 mg/l	0.4 mg/l
Cd	1.2	0.5 mg/l	0.4 mg/l
Cr,T	7.0	2.5	1.8
Cu	4.5	1.8	1.4
Ni	4.1	1.8	1.4
Pb	0.6	0.3	0.2
Zn	4.2	1.8	1.4
TRM	10.5	5.0	4.2

TABLE 12-15

DISCHARGE AND RAW WASTE SILVER CONCENTRATIONS
OBSERVED FOR NINE PLANTS

Plant ID	Avg. Disch. Ag.	Avg. RWL Ag.	Avg. Disch. TSS	Avg. Disch. CN(A)	Fract. Ag. In RWL Me XAg
6073	.014	.01	23	1.3	.003
6081	.045	.05	2	nil	.0059
6088	.135	.82	116	.6	.0019
6087	.135	.16	51	nil	.0010
6085	.140	.17	29	.6	.0033
6076	.420	.89	213*	.2	.0041
6381	.564	1.33	31	.3	.0070
6089	.848	1.71	20*	.5	.0371
6037	1.463	1.59	44	4.0	.0776

*Filter used for solids separation.

METALS TREATMENT USING FILTRATION

Filtration systems provide an alternative to the use of clarifiers for the separation of precipitated metals from electroplating wastes. Following is an analysis of the performance of filters in 10 plants visited and sampled by the Agency.[11] Accompanying data for those 10 plants are presented in Exhibit C.2 of Appendix XII-C. Five of the plants used filters as the primary means of solids separation in their waste treatment system; the other five plants used filtration as a polishing step after clarification. Because the two groups of plants experienced quite different input metal loadings to the filters, they were considered separately.

Filters for Primary Solids Separation

Five plants in the data base separated the precipitated metals from the treated waste stream by filtration. Four of these plants used diatomaceous earth filters; the fifth (plant 6079) employed vertical, cloth-covered filter plates. The data do not appear to indicate any major difference, in either effluent metal content or in separation efficiency between the two filter types.

TSS. None of the filtration systems yielded a totally clear effluent. As shown in Table 12-16, the TSS concentrations in the discharges from the five plants ranged from a low of 1 mg/l to a high of 142 mg/l. Even within a given plant, the discharge TSS concentrations were found to vary considerably from day to day. The median TSS of the 13 daily observations was 11 mg/l.

There appeared to be no correlation between metal concentration and TSS concentration in the discharge, indicating that even though some metal hydroxides might have bypassed or gone through the filters, metal pass-through was not sufficient to account for much of the TSS. Possibly, the TSS was largely composed of suspended filter aids which entered the waste during precoating and backwashing stages; if so, an elevated TSS level was not in itself an indicator of ineffective metals removal.[12]

---

[11]Exhibit C.1 in Appendix XII-C presents the metals plated and additional descriptive information for those plants using filters for separation of solids from the effluent stream.

[12]The highest observed TSS value, 142 mg/l from plant 38050, is possibly associated with the addition to the plating wastes, upstream from the filter, of an oily (677 mg oil/l) discharge from a tumbling operation. The effluent from the filter averaged 62.5 mg oil/l.

TABLE 12-16

TSS IN DISCHARGE FROM FIVE PLANTS USING FILTRATION FOR PRIMARY SOLIDS SEPARATION

Plant ID	Daily TSS Concentration*			Average Total Metals**
	Min.	Med.	Max.	
6079	1	21	31	2.3
6731	1	4	6	2.9
9026	11	15	67	4.9
36041	5	10	32	3.2
38050	-	142	-	2.0

*Concentrations are in mg/l.

**Total metals concentration includes Cr,III, Cu, Ni, Zn, Cd, Ag, Pb, Hg, Sn, and Fe.

Metals. The average concentrations observed downstream from the filter are reported in Table 12-17. It can be seen that the median effluent concentrations of trivalent chromium (Cr,III), Ni, and Zn were less than 1 mg/l. The median Cu concentration was only modestly higher, at 1.1 mg/l.

For every plant, with the exception of 9026, the observed metal concentrations achieved by the filter were no greater than, and usually much less than, the long term average concentrations (Table 12-13) assumed in setting the limitations for clarifier-based systems.

Effect of Raw Waste Concentrations. The metal concentrations discharged from the filter systems show a small increase with raw waste concentrations as shown in Figure 12-11.

It is difficult to ascertain, based on data from only five plants, whether this relationship between effluent and raw waste metal concentration is real. The data gathered, however, indicate that any existing dependence of effluent concentration on raw waste concentration is likely to be small.

The same conclusion appears to hold for the individual metals. Figure 12-12 plots average effluent concentrations of Cr,III, Cu, Ni, and Zn against their respective average raw waste concentrations (where the latter exceed 1 mg/l). Again, the increase in discharge concentration with input concentration is small.

Polishing Filters

Six plants in the data base used clarifiers as the primary means of solids removal, but also filtered the effluent from these clarifiers before final discharge. One of these six plants, 6076 was reported to be experiencing problems with filter plugging and bypassing during the period of data collection; it was deleted from the data base. The filtration systems of the remaining five plants were of three types:

1. Polyester felt cartridge (20077)
2. Multimedia bed (31021)
3. Diatomaceous earth on a precoat (31020, 33070, 33073).

TSS. As was the case for the five plants that used filtration as the primary means of solids separation, the five plants that used polishing filters discharged appreciable concentrations of TSS. As shown in Table 12-18, the effluent TSS concentrations ranged from 1 mg/l to 82 mg/l. The median daily concentration was 16 mg/l.

TABLE 12-17

AVERAGE METAL CONCENTRATIONS IN DISCHARGE FROM FIVE PLANTS USING FILTRATION FOR PRIMARY SOLIDS SEPARATION

Plant ID	Average Metal Concentration*				Total Metal
	Cr,III	Cu	Ni	Zn	
6079	0.7	-	1.0	-	2.3
6731	-	0.5	1.3	0.7	2.9
9026	-	2.9	-	1.5	4.9
36041	0.5	1.1	0.3	0.5	3.2
38050	-	-	0.4	-	2.0
Median	0.6	1.1	0.7	0.7	2.9

*Concentrations are in mg/l. Discharge concentrations are given for individual metals if average RWL concentrations of these metals exceed 1 mg/l.

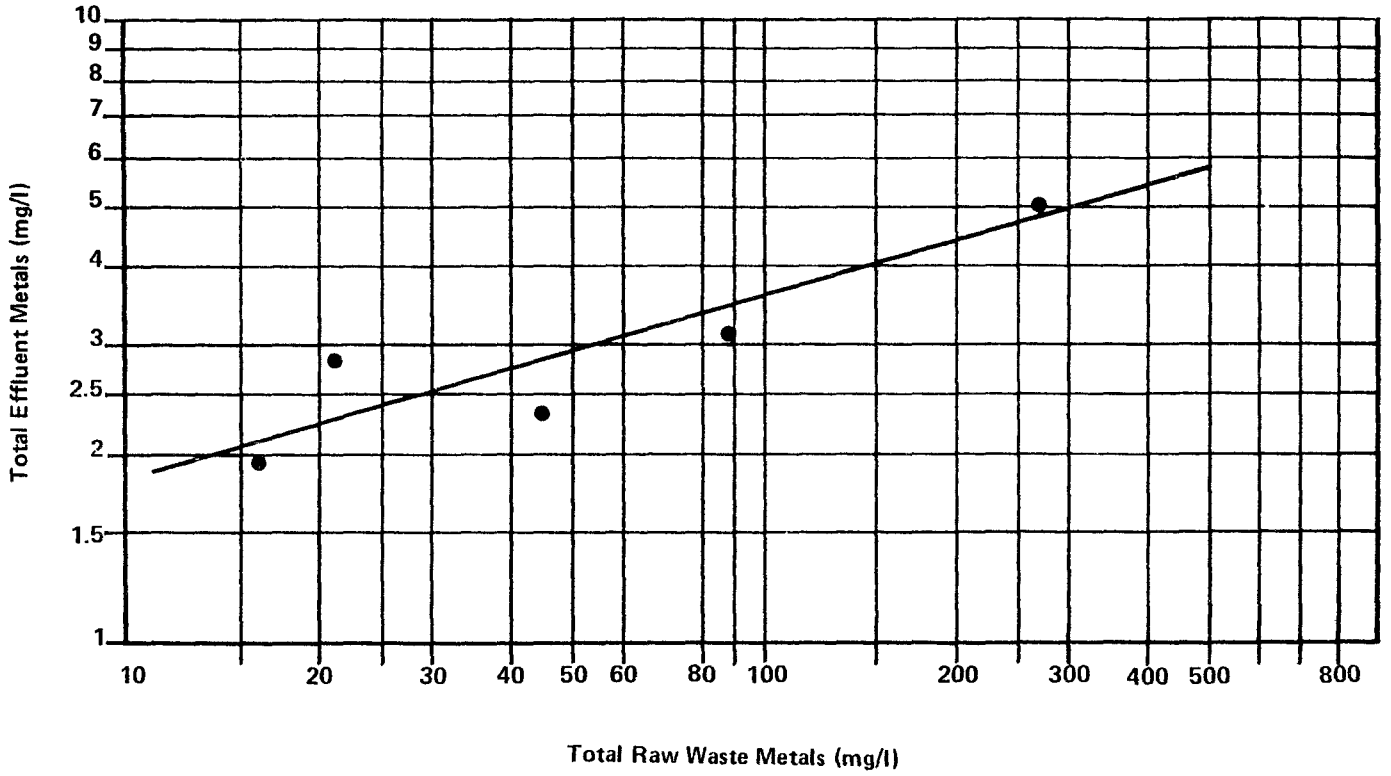

FIGURE 12-11

TOTAL METALS OUT VS. TOTAL METALS IN
FOR FIVE PLANTS WITH FILTRATION AS PRIMARY
MEANS OF SOLIDS SEPARATION

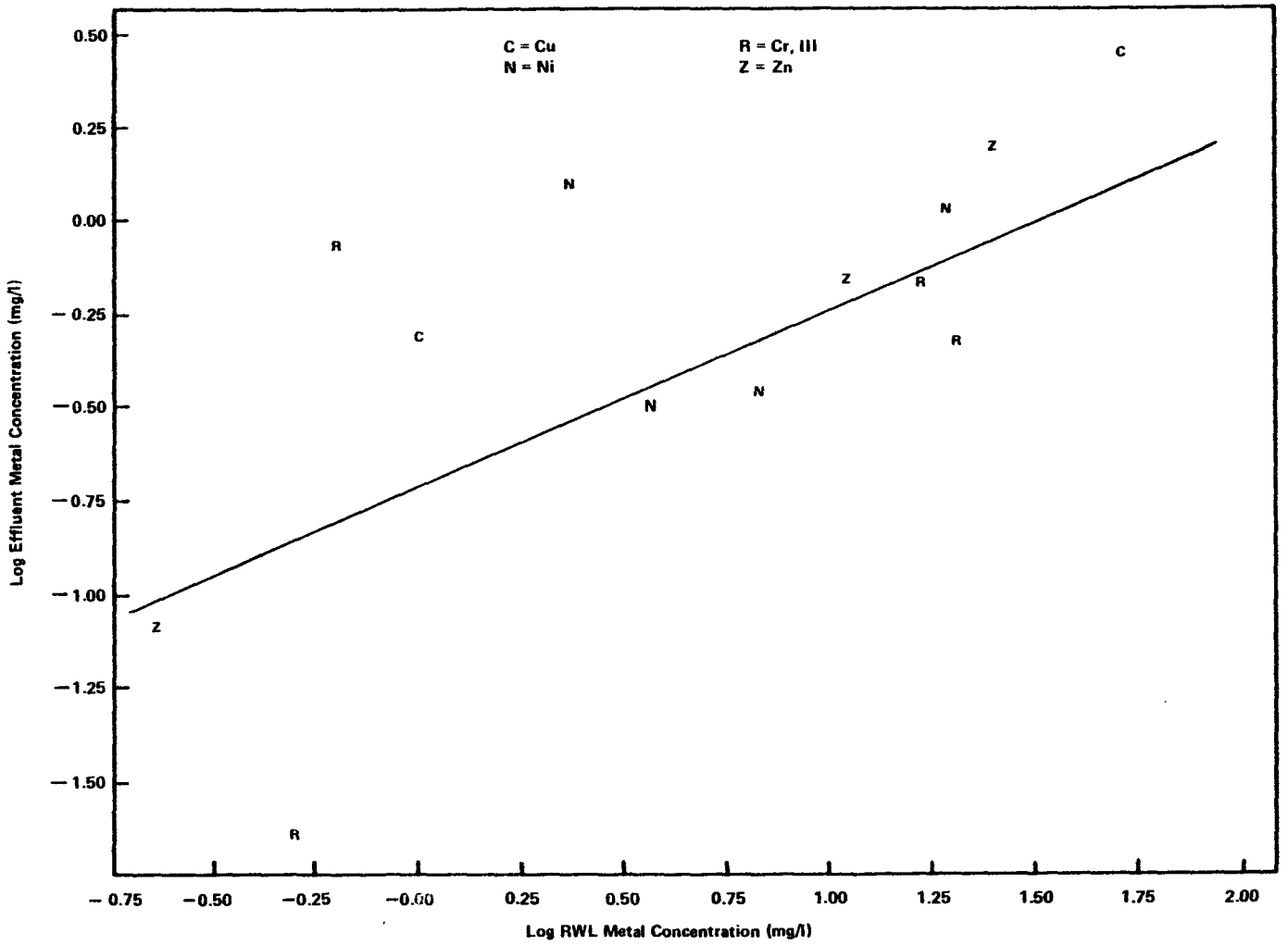

FIGURE 12-12

EFFLUENT METAL CONCENTRATION VS. RWL METAL CONCENTRATION FOR FIVE PLANTS WITH FILTRATION AS PRIMARY MEANS OF METAL REMOVAL

TABLE 12-18

TSS IN DISCHARGE FROM FIVE PLANTS USING POLISHING FILTERS AFTER CLARIFIERS

Plant ID	Daily TSS Concentrations*			Total Metals
	Min.	Med.	Max.	
20077	9	14	26	6.2
31021	7	18	21	3.8
31020	-	16	-	1.6
33070	0.1	13	82	1.1
33073	4	32	42	6.6**

*Concentrations are in mg/l.

**Includes 5.3 mg/l Fe and Sn.

The three plants which used diatomaceous earth polishing filters, and the two plants using polishing filters of other design, achieved about the same discharge TSS concentrations. However, the diatomaceous earth filters appeared somewhat more effective at achieving low discharge metal concentrations than the other filters. The median value of seven daily observations of total metals in the discharges of the diatomaceous earth plants was 1.6 mg/l; this is roughly one-third of the 4.9 mg/l median observed for the polyester or multimedia filters.

The two types of filters also differed with respect to the relationship between TSS and metal concentrations. The diatomaceous earth polishing filters exhibited no significant correlation between TSS and total metals concentrations; this parallels the results observed when diatomaceous earth filters were used for primary solids separation. The two plants (20077 and 31021) using polishing filters of other kinds did, however, show a significant increase in total metals concentration with increasing TSS. The daily observations from the effluent of these two plants are plotted in Figure 12-13.

Metals. The average metal concentrations observed downstream from the polishing filters are reported in Table 12-19. It is apparent that the combination of a clarifier and a diatomaceous earth filter (31020, 33070, 33073) was successful in reducing individual effluent metal concentrations to 1 mg/l or below. Plant 31020, which discharged Cu at an average concentration of 1 mg/l, had a RWL Cu concentration of 108 mg/l. It thus achieved more than 99% removal of this metal. The clarification-filtration systems of plants 20077 and 31021 were not quite as effective in achieving low discharge metal concentrations, although only the Zn discharge of 20077 was much above the 1 mg/l level.

Summary

The above data indicate that waste treatment systems for electroplating which use filtration as either the primary means of solids separation or as an adjunct to clarification can attain average concentrations of Cr,III, Cu, Ni, and Zn of about 1 mg/l or less. The median TSS concentration in the average daily discharge from 10 filtration plants (29 samples) was 17 mg/l. For those seven plants that used diatomaceous earth to assist filtration, the TSS concentrations did not appear to be correlated with metal concentrations, implying that, for these plants, measurement of TSS discharge concentration cannot serve as a reliable substitute for measurement of the individual metal concentrations.

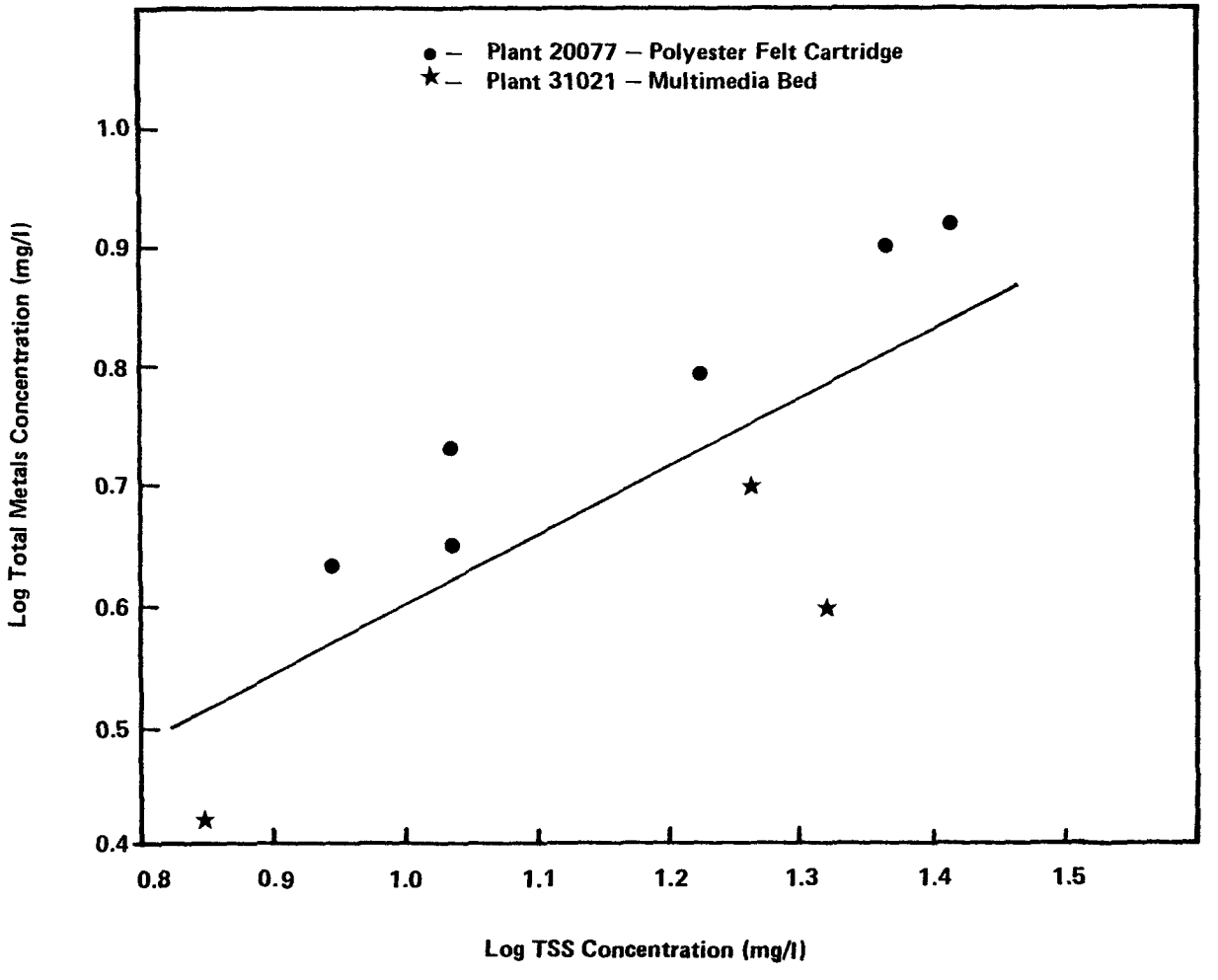

FIGURE 12-13

TOTAL METALS VS. TSS IN DISCHARGE FROM TWO PLANTS WITH POLISHING FILTERS

TABLE 12-19

AVERAGE METAL CONCENTRATIONS IN DISCHARGES FROM FIVE PLANTS USING POLISHING FILTERS AFTER CLARIFIER

Plant ID	Average Metal Concentrations*				Total Metals
	Cr,III	Cu	Ni	Zn	
20077	0.5	0.5	1.1	2.7	6.2
31021	0.1	1.3	1.1**	0.9	3.8
31020	0.0	1.0	0.1**	0.0**	1.6
33070	0.5	0.1**	-	0.1**	1.1
33073	0.9	0.1	0.2	0.0**	6.6***
Median	0.5	0.5	0.2	0.1	3.8

*Concentrations are in mg/l. Discharge concentrations are given for individual metals if the average RWL concentrations of these metals exceed 1 mg/l. Total metals concentrations include Fe and Sn.

**The RWL concentration of this metal is less than 10% of total RWL metal concentration.

***Includes 5.3 mg/l Fe and Sn.

METALS REMOVAL FOR ELECTROLESS PLATING AND PRINTED CIRCUIT BOARD MANUFACTURING

The electroless plating and printed circuit board manufacturing processes both utilize electroless plating operations. The nature of these processes is different because the chemical chelating agents used in these operations bond to the metals and form complexes which are difficult to decompose under normal treatment conditions.

Differences Between Subcategories

The primary difference between the two subcategories is in the type of manufacturing processes performed. The electroless plating subcategory contains several similar plating processes whose only differences are metal deposited. The printed circuit board subcategory includes all of the manufacturing processes involved in the manufacturing of printed circuit boards. This includes electroless plating, as well as such processes as cutting, drilling, screening, electroplating and etching. This variety of manufacturing processes produces a much more complex combination of raw wastes than are produced in the electroless plating subcategory. Because of this, the companies in the data base which manufactured printed circuit boards as the major portion of their business tended to have treatment systems which were more sophisticated than those of the other electroless platers. Of the nine printed circuit board manufacturers in the data base, seven (78%) had a treatment system adapted in some major way to the characteristics of the electroless waste. In contrast, of the 15 electroless platers, only 3 (20%) had a system more effective than that typical for treatment of normal metal plating wastes.

There were also significant differences between the Printed Circuit and Electroless Plating subcategories in the concentration of the electroless metal in the raw waste load.[13] For example, 9 of 10 plants that deposited electroless Cu had a median Cu concentration in the RWL of 6 mg/l; 13 of 15 plants that deposited electroless Ni had a median RWL of 31 mg/l. This difference in RWL potentially affects the attainable effluent concentration in two ways: first, a higher RWL concentration requires a greater proportion of metal removal to achieve an effluent limitation; second, and possibly more important, in the absence of any specific treatment systems for isolating and destroying complexing wastes, a higher RWL concentration of the

---

[13]Plants and data are listed in Appendix XII-D. Electroless plating plant 6081 deposited Cu. Raw waste load data were not available for printed circuit board plant 2062 or electroless plant 41067.

electroless metal translates to a higher effluent concentration of chelate, possibly increasing the difficulty of reaching low effluent metal concentrations.

Effluent Concentrations

As shown in Table 12-20, the median discharge Cu concentration achieved by 10 plants that plated electroless Cu was 1.2 mg/l. Plant 6081 performed only about 5 percent of production by an electroless process and plant 30050 had a raw waste Cu concentration of 1200 mg/l. Removal of these two cases from the data did not affect the median observed effluent Cu concentration, although it reduced the scatter about this median. Removal of plant 17061, with a pH of 6.8, reduced the median from 1.2 to 1.0 mg/l.

A similar range of discharge Cu concentrations was observed for the seven plants in Table 12-21. These plants, which deposited electroless Ni, also electroplated Cu. With the exception of plant 20070, the electroless Ni rinse wastes were combined without separate treatment with the Cu wastes. It is possible that in these combined wastes, some Cu complexing could have occurred. The four plants with a pH greater than 7.5 had a median Cu effluent of about 1.0 mg/l.

Before the analysis of observed effluent concentrations, the 14 plants of Exhibit D.1 in Appendix XII-D that deposited electroless Ni (plant 6081 deposited electroless Cu) were screened to delete those plants without solids separation in their treatment system (4077, 30074, 41069), and those plants with less than 1 mg/l raw waste load concentration of electroless nickel (6051, 23061, 41069). Two additional plants were omitted from the analysis of electroless plating performance. Plant 41067 had incomplete descriptive information concerning its processes, treatment system, and RWL concentration; the trip report for plant 20069 indicated that at the time of the sampling its treatment system was hydraulically overloaded.

Of the remaining seven plants shown in Table 12-21 as plating nickel electrolessly, five had a pH greater than 7.5. These five plants had a median effluent concentration of about 1.1 mg/l of nickel.

Conclusion

The Printed Circuit and Electroless Plating subcategory plants with effluent pH levels above 7.5 discharged Cu and Ni at a median of about 1 mg/l. These concentrations are less than the 1.4 mg/l average concentration previously recommended as providing the basis for Cu and Ni limitations for the Electroplating category. The Agency, therefore, has set the Cu and Ni limitations for the Printed Circuit

TABLE 12-20

METAL REMOVAL EFFICIENCY OF TREATMENT SYSTEM OF 10 PLANTS DEPOSITING Cu BY ELECTROLESS PLATING

Plant ID	Effluent Cu (mg/l)	% RWL Removed	Effluent Ni (mg/l)	% RWL Removed	pH
2062	1.52	NA	*	*	9.3
4065	0.64	88	*	*	**
4069	0.75	88	0.23	92	9.5
5020	0.98	90	0.44	95	7.9
5021	2.25	26	0.85	82	7.6
6081	0.75	73	*	*	8.5
17061	1.52	75	*	*	6.8
19063	3.15	74	0.11	95	7.3
30050	39.61	97	0.31	99	6.8
36062	0.29	100	0.58	92	8.2
Median	1.2	88	0.4	94	

* RWL Ni less than 1 mg/l.
** Inappropriate figure, since pH is reduced after clarification.
NA - Raw waste load data not available.

TABLE 12-21

METAL REMOVAL EFFICIENCY OF TREATMENT SYSTEM OF SEVEN PLANTS DEPOSITING Ni BY ELECTROLESS PLATING

Plant ID	Effluent Cu (mg/l)	% RWL Removed	Effluent Ni (mg/l)	% RWL Removed	pH
6381	3.75	92	4.90	84	7.5
12065	3.98	16	9.23	13	7.3
20064	0.82	99	2.80	95	9.2
20070	0.56	99	0.38	99	9.1
20073	1.74	98	1.13	98	7.8
20083	1.03	98	2.30	88	9.3
20085	0.18	99	1.11	99	9.0
Median	1.0	98	2.3	95	

Board and Electroless Plating subcategories equal to those of the Electroplating category.

OVERVIEW OF CONCENTRATION-BASED PRETREATMENT STANDARDS

Following are concentration-based limitations, in mg/l, for those regulated pollutants discharged by the electroplating industry. Table 12-22 presents the long term averages (LTA), daily and 30-day-average variability factors (VF and VF_{30}), and daily and 30-day-average maximum limitations (L and L_{30}) for the Electroplating category and Electroless Plating and Printed Circuit Board subcategories. These limitations are calculated as shown in Equations [3] and [4] in the section on statistical methodology. Table 12-23 gives N-day-average maximum limitations (L) for each pollutant listed in Table 12-22.

The limitations have been calculated for each pollutant using the following equation.

$$L = L_{30} + K \ (L_1 - L_{30}) \qquad [9]$$

where

K is a set of constants given in Table 12-23.

This equation with these constants was shown in Appendix XII-A.5 to provide excellent approximations to corresponding limitations calculated using the N-day-average variability factors developed in Appendix XII-A.2. Equation [9] was used to obtain N-day-average limitations for N = 2, 3,...29 because of its simplicity and accuracy. The resulting N-day-average maximum limitations for a given pollutant are not to be exceeded by the average of any set of N, randomly selected single-day observations of that pollutant. The limitations for the pollutants total cyanide (CN,T), copper (Cu), total chromium (Cr,T), nickel (Ni), zinc (Zn), total regulated metals (TRM), and silver (Ag), apply only to large platers, defined as those plants having a flow of more than 10,000 gallons per day. The limitations for amenable cyanide apply only to small platers, or those plants which have a flow of less than 10,000 gallons per day. The limitations for lead (Pb) and cadmium (Cd) apply to all platers.

EQUIVALENT MASS-BASED PRETREATMENT STANDARDS

Even though plants may have pretreatment systems which are well-designed, operated, and maintained, the effluent concentrations of the individual metals or pollutants may exceed the concentration-based limitations due to water conservation practices that reduce plant flow. In order to avoid penalizing these plants or discouraging their water conservation practices, mass-based limitations are calculated below, as an alternative to the concentration-based limitations.

TABLE 12-22

SUMMARY OF LONG TERM AVERAGES, VARIABILITY FACTORS AND DAILY AND 30-DAY-AVERAGE MAXIMUM LIMITATIONS*

Pollutant**		LTA***	Daily Max. VF	Daily Max. L	30-Day-Avg. Max. VF_{30}	30-Day-Avg. Max. L_{30}
(1)	CN,T	0.15	5.0	0.75	1.5	0.23
	Cu	1.4	3.2	4.5	1.3	1.8
	Cr,T	1.8	3.9	7.0	1.4	2.5
	Ni	1.4	2.9	4.1	1.3	1.8
	Zn	1.4	3.0	4.2	1.3	1.8
	TRM	4.2	2.5	10.5	1.2	5.0
	Ag	0.4	2.9	1.2	1.3	0.5
(2)	CN,A	1.0	5.0	5.0	1.5	1.5
(3)	Cd	0.4	2.9	1.2	1.3	0.5
	Pb	0.2	2.9	0.6	1.3	0.3

*For the Electroplating category, Electroless Plating subcategory, and Printed Circuit Board subcategory.

**Limitations in pollutant group (1) apply to large platers (over 10,000 gal./day) only.

Limitations in group (2) apply to small platers (under 1 0 , 0 0 0 gal./day) only.

Limitations in group (3) apply to all platers.

***The Long Term Average (LTA) is not a limitation.

TABLE 12-23
SUMMARY OF CONCENTRATION-BASED PRETREATMENT STANDARDS*

		N-Day-Average Maximum Pollutant Limitations** (mg/l)									
N	Constant KN	CN, T	Cu	Cr, T	Ni	Zn	TRM	Ag	Cd	Pb	CN, A
1	1.000	.75	4.5	7.0	4.1	4.2	10.5	1.2	1.2	.6	5.0
2	.597	.54	3.4	5.2	3.2	3.2	8.3	.9	.9	.5	3.6
3	.430	.45	3.0	4.4	2.8	2.8	7.4	.8	.8	.4	3.0
4	.335	.40	2.7	4.0	2.6	2.6	6.8	.7	.7	.4	2.7
5	.266	.37	2.5	3.7	2.4	2.4	6.5	.7	.7	.4	2.4
6	.223	.35	2.4	3.5	2.3	2.3	6.2	.7	.7	.4	2.3
7	.186	.33	2.3	3.3	2.2	2.2	6.0	.6	.6	.4	2.2
8	.157	.32	2.3	3.3	2.2	2.2	5.9	.6	.6	.4	2.1
9	.141	.30	2.2	3.1	2.1	2.1	5.8	.6	.6	.3	2.0
10	.127	.30	2.1	3.1	2.1	2.1	5.7	.6	.6	.3	1.9
15	.064	.26	2.0	2.8	1.9	2.0	5.4	.5	.5	.3	1.7
20	.033	.25	1.9	2.6	1.9	1.9	5.2	.5	.5	.3	1.6
30	.000	.23	1.8	2.5	1.8	1.8	5.0	.5	.5	.3	1.5

For example, a plant may have installed new technology or developed new practices which significantly reduced the flow of water. Though individual and total pollutant loads remained the same or even decreased, the effluent pollutant concentrations would have increased due to the reduced flow of waste water. Thus, limitations based on the mass of pollutant discharged per unit of production, rather than volume of water, were calculated as an option for these plants. These limitations were calculated specifically to benefit a plant achieving water usage (i.e., volume of water per unit of production) lower than the median plant water usage for its plating category (Electroplating, Electroless Plating or Printed Circuit Board).

Calculation of Mass-Based Constants

The mass-based limitations were obtained by calculating the median water usage for each of the three categories: Electroplating, Electroless, and Printed Circuit Board. These were, in turn, multiplied by the appropriate concentration-based limitations to obtain equivalent mass-based limitations.

The data used by the Agency in this analysis are in Appendix XII-E. The water usage for a plant in l/op-m² (liters per each square meter plated for each plating operation) was calculated by the following equation:

$$\text{Water Usage} = \frac{\text{Flow x Conversion Factor}}{\text{Area}} \qquad [10]$$

where

Water Usage = (l/op-m²) liters of water used for each square meter plated for each plating operation

Flow = flow of plant in (gal./hr.)

Conversion Factor = 40.74 (l x ft.²)/(gal. x m²)

= conversion from ft.² to m² and gal. to l.

Area = sum of area plated (ft.²/hr.) for each plating operation.

The values for the hourly area plated and flow (Appendix XII-E) were substituted into Equation [10] to determine the water usage for that day, and then averaged over all sampled days for each plant (Tables 12-24 through 12-26). The medians of the average plant water usage in l/op-m² for each category were as follows: Electroplating, 39.0; Electroless, 36.7; and Printed Circuit Board, 89.0.

TABLE 12-24

WATER USAGE FOR THE ELECTROPLATING CATEGORY ($l/op\text{-}m^2$)

Plant ID	Water Usage	Rank
20084	1.1	1
20079	2.0	2
6086	3.3	3
20080	3.9	4
6087	4.8	5
9026	9.9	6
20010	14.9	7
19051	17.9	8
6089	18.1	9
40062	19.2	10
20077	19.5	11
6079	21.4	12
6077	22.3	13
15070	23.7	14
20086	26.8	15
33071	28.0	16
20078	28.2	17
31050	30.2	18
40061	32.8	19
33073	33.3	20
6088	37.5	21
20082	37.9	22
33070	38.7	23
11050	39.0	24
31021	40.6	25
6084	40.8	26
13	41.1	27
36041	42.1	28
6037	43.5	29
4045	43.7	30
31020	46.3	31
38050	49.4	32
6085	58.3	33
6073	59.6	34
6036	60.4	35
6081	65.0	36
6075	66.3	37
10020	76.8	38
6074	88.0	39
6053	97.1	40
19050	106.6	41
14	108.1	42

TABLE 12-24 (Continued)

Plant ID	Water Usage	Rank
20081	110.0	43
6731	170.5	44
5050	253.9	45
6076	407.8	46
6083	1046.0	47
Median	39.0	

TABLE 12-25

WATER USAGE FOR THE ELECTROLESS PLATING SUBCATEGORY ($l/op\text{-}m^2$)

Plant ID	Water Usage	Rank
20085	8.8	1
20064	9.9	2
30074	17.7	3
20073	22.9	4
20069	23.5	5
20083	24.8	6
6381	30.5	7
20070	36.7	8
6081	65.1	9
12065	74.1	10
41067	108.3	11
6051	113.9	12
4077	118.7	13
41069	141.1	14
23061	2108.1	15
Median	36.7	

TABLE 12-26

WATER USAGE FOR THE PRINTED CIRCUIT BOARD SUBCATEGORY ($l/op\text{-}m^2$)

Plant ID	Water Usage	Rank
5020	48.5	1
19063	56.0	2
2062	71.1	3
4069	85.2	4
36062	92.9	5
5021	107.6	6
4065	142.5	7
17061	282.7	8
Median	89.0	

Note: Plant 30050 has no data on area plated.

Calculation of Equivalent Mass-Based Limitations

Table 12-27 lists the N-day-average maximum mass-based pretreatment standards (mg/op-m²) for the Electroplating category and Electroless Plating subcategory. These limitations were obtained by multiplying the N-day-average maximum concentration-based limits (mg/l) of Table 12-23 by a water usage of 39 l/op-m² (median of Table 12-24). Table 12-28 lists the N-day-average maximum mass-based standards for the Printed Circuit Board subcategory. These were obtained by multiplying the concentration-based limits of Table 12-23 by a median water usage of 89 l/op-m² (Table 12-6).

TOTAL SUSPENDED SOLIDS (TSS) AS A MONITORING ALTERNATIVE

For those plants that plate common metals and treat their wastes using conventional solids removal technology[14] the discharge concentrations of each of the metals are related to two factors: (1) the effluent concentrations of TSS; and (2) the ratio of the raw waste load (RWL) metal concentration to the sum of all RWL metal concentrations. Earlier analyses estimated limitations appropriate for individual metals based on the observed relationships and on attainable levels of effluent TSS and RWL metals ratio.

The previous edition of this document noted the desirability of monitoring alternatives. Chief among these was TSS concentration with certain restrictions on discharge pH and on the presence of complexing agents in the waste stream.

In view of comments received regarding the analysis of TSS in the previous document, the agency has conducted additional analyses. The combined analyses and resulting conclusions are reported below, beginning with a disucssion of metal hydroxide equivalents and the analysis of available data, and concluding with engineering considerations.

Metal Hydroxide Equivalents

One of the commenters on the document suggested an alternative approach to attain TSS limitations which would ensure that the individual and total metals limitations are met. This approach is based on the use of metal hydroxide equivalents to caclulate TSS as a function of the individual and total metals limitations.

---

[14]CN oxidation, Cr,VI reduction, alkaline preciptiation, and solids separation by clarification.

TABLE 12-27

SUMMARY OF MASS-BASED PRETREATMENT STANDARDS FOR THE ELECTROPLATING CATEGORY AND ELECTROLESS PLATING SUBCATEGORY

N-Day-Average Maximum Pollutant Limitations (mg/op-m^2)

N	CN, T	Cu	Cr, T	Ni	Zn	TRM	Ag	Cd	Pb	CN, A
1	29	176	273	160	164	410	47	47	23	195
2	21	133	202	124	126	323	36	36	19	140
3	18	115	173	109	110	287	31	31	17	117
4	16	105	156	100	102	267	29	29	16	104
5	14	98	144	94	95	252	27	27	15	95
6	13	94	137	90	91	243	26	26	14	89
7	13	90	130	87	88	235	25	25	14	84
8	12	88	127	85	86	231	24	24	14	81
9	12	85	122	83	83	225	23	23	13	78
10	12	84	120	82	82	222	23	23	13	76
15	10	77	109	76	76	209	21	21	12	67
20	10	74	103	73	73	202	20	20	12	63
30	9	70	98	70	70	195	20	20	12	59

TABLE 12-28

SUMMARY OF MASS-BASED PRETREATMENT STANDARDS FOR THE PRINTED CIRCUIT BOARD SUBCATEGORY

N-Day-Average Maximum Pollutant Limitations (mg/op-m^2)

N	CN, T	Cu	Cr, T	Ni	Zn	TRM	Ag	Cd	Pb	CN, A
1	57	401	623	365	374	935	107	107	53	445
2	48	304	462	282	288	737	82	82	43	319
3	40	264	395	248	252	655	71	71	38	267
4	36	241	357	229	232	609	65	65	36	238
5	33	224	329	215	217	575	61	61	34	215
6	31	214	312	206	208	554	58	58	33	203
7	29	205	297	198	200	536	56	56	32	191
8	28	200	289	194	196	527	55	55	31	186
9	27	194	279	189	190	514	53	53	30	177
10	26	191	273	186	187	507	52	52	30	173
15	23	175	248	173	174	476	48	48	28	153
20	22	158	236	167	167	461	47	47	28	144
30	20	160	223	160	160	445	45	45	27	134

Theoretically, a dissolved metal concentration could be measured as TSS in its metal hydroxide form if all of the metal assumed this form. To obtain a value for the metal hydroxide concentration, the dissolved metal concentration is multiplied by its individual metal hydroxide constant (C), which is the ratio of the molecular weight of a metal hydroxide molecule to the atomic weight of the metal. If TSS were calculated by multiplying each individual metal limitation by its hydroxide constant and summing over all regulated metals, as suggested by the commenter, our TSS value would overestimate an equivalent TSS value for total metals.

A modification of this approach was constructed utilizing a weighted hydroxide constant (WHC), calculated as follows:

WHC =

= (.31 x 1.54) + (.23 x 1.52) + (.23 x 1.58) + (.23 x 1.98)

= 1.68

where M = Cu, Cr,T, Ni, Zn.

The long term averages (LTA), as previously calculated, and the fraction LTA/ LTA are shown in Table 12-29. This weighted hydroxide constant of 1.68 is, in turn, multiplied by daily and 30-day-average maximum total regulated metals (TRM) limitations previously given to obtain TSS hydroxide equivalents. These are 17.8 and 8.5 mg/l, respectively, as shown in Table 12-30.

However, Table 12-11 shows that the median ratio of total regulated metals to the total metals in the raw waste load is .91. To reflect the presence of the other metals in the waste stream, the alternative TSS daily and 30-day average maximum limitations have been set at 20 and 10 mg/l, respectively.

Analysis of 25 Plants in Electroplating Category

Beginning with these hydroxide equivalents, an analysis of 25 plants (92 observations) was conducted on plants listed in Exhibit B.1 of Appendix XII-B and previously employed to calculate the limitations for individual and total regulated metals in the Common Metals subcategory. The observed concentrations for Cr,T, Cu, Ni, Zn, TRM and TSS, as extracted from the data base, are listed in Tables 12-31 and 12-32. Table 12-31 presents those observations for which none of the observed metal concentrations exceeded the corresponding daily maximum limitation, ranked according to TSS concentration. Note that of the entire 92 observations:

1. 43 (47%) were ≤ 18 mg/l

TABLE 12-29

INDIVIDUAL METAL HYDROXIDE CONSTANTS

Metal	LTA*	LTA/ΣLTA	C_{OH}**
Cr	1.9 mg/l	.31	1.54
Cu	1.4	.23	1.52
Ni	1.4	.23	1.58
Zn	1.4	.23	1.98
Total	6.1	1.00	

*Long Term Average (mg/l)
**Hydroxide Constants

TABLE 12-30

TOTAL SUSPENDED SOLIDS HYDROXIDE EQUIVALENTS (mg/l)

	LTA	Daily Max.	30-Day Avg.
TRM* Limitations	4.2	10.6	5.1
TSS Equivalents**	7.0	17.8	8.5

*Total Regulated Metals (mg/l)
**TSS Equivalents (mg/l) = TRM x WHC = TRM x 1.68

TABLE 12-31

OBSERVATIONS* WITH NO LIMITATIONS** EXCEEDED

Plant ID	Cu	Ni	Cr,T	Zn	TRM	TSS	Rank
20080	16	50	168	333	567	10	1
6081	750	95	170	80	1095	100	2
20081	29	70	289	583	971	100	3
20081	27	128	80	667	902	100	4
13	180	250	1300	180	2410	200	5
14	40	380	370	170	960	400	6
6081	850	105	102	43	1100	1000	7
14	340	790	230	320	1680	1300	8
14	110	900	990	400	2400	1000	9
20081	26	125	64	600	815	2000	10
20081	26	320	235	400	981	2000	11
13	890	300	3500	340	5030	2000	12
14	330	1700	1500	100	3630	2000	13
14	120	740	180	340	1380	2000	14
14	100	80	660	250	1090	2000	15
14	190	840	370	360	1760	3000	16
6081	650	80	155	52	937	4000	17
20080	28	18	195	375	616	5000	18
20081	24	90	43	500	657	7000	19
36040	60	1560	533	24	2177	8000	20
13	400	600	1500	250	2750	8000	21
13	300	370	1300	230	2700	8000	22
36040	76	778	333	13	1200	11000	23
13	770	920	1700	300	3690	11000	24
6075	2230	2880	444	722	6276	12000	25
15070	20	50	4250	1330	5650	12000	26
33050	147	55	12	771	985	12000	27
20010	29	175	17	181	402	12000	28
20081	700	388	783	600	2471	12000	29
20080	110	180	783	500	1573	13000	30
13	560	920	1400	240	3120	13000	31
31021	1680	1120	128	1000	3928	14000	32
36040	71	1780	733	16	2600	14000	33
20010	22	230	20	82	354	14000	34
20078	307	144	400	29	880	14000	35
20077	316	750	435	1800	3301	15000	36
6085	3290	2000	1630	258	7178	16000	37
20077	562	1080	166	3240	5048	17000	38
20080	647	50	396	500	1593	17000	39
20080	470	50	300	542	1362	17000	40
20080	71	80	739	700	1590	17000	41
20077	625	1310	78	2760	4773	18000	42
20080	106	140	609	500	1355	18000	43
6075	2230	3870	101	833	7034	20000	44
6074	35	600	143	21	799	21000	45
15070	20	40	3750	3120	6930	21000	46
20077	474	1250	739	3000	5463	21000	47
20086	250	286	944	470	1950	21000	48
31021	1740	875	200	1190	4005	21000	49
6083	147	2270	556	166	3139	22000	50
6074	16	571	714	14	1315	26000	51
6075	4060	1500	243	1170	6973	26000	52
33073	301	332	1110	30	1823	28000	53
20010	9	200	50	159	418	28000	54
20078	247	106	500	33	886	32000	55
20081	42	3500	1050	750	5342	32000	56
20086	469	357	1720	882	3428	33000	57
31021	2940	2120	230	3130	8420	33000	58
20082	2149	901	687	618	4355	36100	59
20082	3359	530	798	257	4944	36400	60
20078	372	427	2600	83	3482	37000	61
20078	400	381	1640	40	2461	38000	62
33024	160	19	70	1090	1339	42000	63
6074	44	304	333	34	715	46000	64
20082	206	6032	526	112	6876	49600	65
20010	19	422	41	194	676	53000	66
20073	400	262	1090	24	1776	55000	67
20084	765	1440	125	800	3130	55000	68
20079	400	489	826	32	1747	56000	69
20079	115	2120	1600	2250	6085	76000	70
20010	18	237	30	50	335	80000	71
14	70	400	1200	150	1820	82000	72
33073	1110	964	2120	533	4727	85000	73
20079	147	2000	1870	2250	6267	96000	74
20010	12	156	27	20	215	110000	75
6083	297	1080	1220	303	2900	136000	76

*Ranked by TSS (μg/l)

**The metals (maximum daily limitation in parentheses) for which the observed effluent levels were compared to the limitations were Cu (4.5), Ni (4.1), Cr, Total (7.0), Zn (4.2), and Total Regulated Metals (10.5).

TABLE 12-32

OBSERVATIONS* WITH AT LEAST ONE LIMITATION** EXCEEDED

Plant ID	Cu	Ni	Cr.T	Zn	TRM	TSS	Rank
15070	16	45	7370	3000	10431	25000	1
20084	85	212	7760	10000	18057	33000	2
6087	2630	6390	52	1120	10192	34000	3
20082	6160	1406	838	121	8525	36000	4
6037	5930	1880	16	88	7914	39000	5
33073	7680	1620	2630	533	12463	39000	6
6085	5130	6670	1950	1060	14810	40000	7
6037	4490	2770	16	62	7338	42000	8
6086	118	4280	7610	166	12174	42000	9
6087	1940	7300	59	1000	10299	44000	10
6087	5000	7720	75	1750	14545	74000	11
20079	824	63750	2300	1250	68124	78000	12
6086	150	12500	21000	120	33770	108000	13
6086	127	3130	13600	134	16991	120000	14
20079	470	6130	4370	2820	13790	130000	15
20079	412	5250	9920	2730	18312	132000	16

*Ranked by TSS (μg/l)

**The metals (maximum daily limitation in parentheses for which the observed effluent levels were compared to the limitations were Cu (4.5), Ni (4.1), Cr, Total (7.4), Zn (4.2), and Total Regulated Metals (10.5).

2. 36 (39%) were ≤ 15 mg/l

3. 22 (24%) were ≤ 10 mg/l.

Also note that of the entire 25 plants:

1. All observations for 6 plants (24%) were ≤ 18 mg/l. (Total 21 observations)

2. All observations for 4 plants (16%) were ≤ 15 mg/l. (Total 13 observations)

3. All observations for 1 plant (4%) were ≤ 10 mg/l. (Total 3 observations)

Table 12-32, also ordered by TSS concentration, contains those observations where at least one individual metal limitation was exceeded. As shown in this table, the lowest value of a plant exceeding at least one limitation was 25 mg/l.

SUMMARY

This chapter has reviewed the need for pretreatment of pollutant discharges by the electroplating industry, the major technologies available within the industry for pretreatment of pollutant discharges, and statistical analyses and modeling studies conducted to evaluate the effectiveness of these technologies. Statistical methods employed for each pollutant included the calculation of the long term average which is the expected discharge from a plant with a well-designed and operated pretreatment system, and the derivation of variability factors which allow for random fluctuations in operation of pretreatment systems. The long term averages and variability factors were used to calculate pollutant limitations which the discharge of a plant will not be permitted to exceed.

Table 12-33 lists the daily and 30-day-average maximum concentration-based (mg/l) limitations and mass-based (mg/op-m^2) alternative pretreatment standards for the Electroplating category, and the Electroless and Printed Circuit Board subcategories. The main body of this section also presents N-day-average maximum limitations for N = 2, 3,...,29. Applicability of the limitations for each regulated pollutant to large platers (more than 10,000 gal./day), small platers (less than 10,000 gal./day), or all platers is specified in Table 12-33. Daily and 30-day-average maximum limitations are not to be exceeded by any single-day or any average of 30 single-day observations, respectively.

The equivalent mass-based standards were provided as an alternative to the concentration-based standards for plants employing water conservation technologies. Also, daily and 30-day-average maximum limitations on the concentration of total suspended solids of 15 and 10 mg/l, respectively, are provided as an alternative to limitations on Cu, Cr,T, Ni, Zn and total regulated metals to reduce monitoring costs for plants demonstrating exceptional pollutant removal.

TABLE 12-33

SUMMARY OF CONCENTRATION-BASED PRETREATMENT STANDARDS
AND EQUIVALENT MASS-BASED PRETREATMENT STANDARDS

Pollutant*		Conc.-Based+ (mg/l)		Mass-Based++ ($mg/op\text{-}m^2$)		Mass-Based+++ ($mg/op\text{-}m^2$)	
		L **	L_{30}***	L	L_{30}	L	L_{30}
(1)	CN,T	0.75	0.23	29	9	67	20
	Cu	4.5	1.8	176	70	401	160
	Cr,T	7.0	2.5	273	98	623	223
	Ni	4.1	1.8	160	70	365	160
	Zn	4.2	1.8	164	70	374	160
	TRM	10.5	5.0	410	195	935	445
	Ag	1.2	0.5	47	20	107	45
(2)	CN,A	5.0	1.5	195	59	445	134
(3)	Cd	1.2	0.5	47	20	107	45
	Pb	0.6	0.3	23	12	53	27

\+ Applies to Electroplating category and Electroless Plating and Printed Circuit Board subcategories.

++ Applies to Electroplating category and Electroless Plating subcategory.

+++ Applies to Printed Circuit Board subcategory.

* Limitations in pollutant group
(1) apply to large platers (over 10,000 gal./day) only
(2) apply to small platers (under 10,000 gal./day) only
(3) apply to all platers.

** Daily maximum limitations.

*** 30-day-average maximum limitations.

APPENDIX XII-A

DERIVATION OF VARIABILITY FACTOR EQUATIONS AND FURTHER ANALYSIS OF THE LOGNORMALITY ASSUMPTION

APPENDIX XII-A

DERIVATION OF VARIABILITY FACTOR EQUATIONS AND FURTHER ANALYSIS OF THE LOGNORMALITY ASSUMPTION

Appendix XII-A.1 and XII-A.2 develop the derivation of the daily and N-day-average variability factor equations (Equations [1] and [2] of Chapter XII, respectively). Appendix XII-A.3 provides additional support for the assumption that the daily concentration of a pollutant follows a lognormal distribution. Appendix XII-A.4 presents sample correlation coefficients between the sample plant means and standard deviations of the log of the concentration for each pollutant. These nonsignificant correlation coefficients support the use of plants with both high and low mean pollutant concentrations in the calculation of the variability factors. Appendix XII-A.5 presents a justification of the approximation used to calculated N-day-average maximum limitations.

APPENDIX XII-A.1

DERIVATION OF DAILY VARIABILITY FACTOR EQUATION

The daily concentration of a plant's metal or pollutant discharge is assumed to be random and was found to closely follow the lognormal distribution (Chapter XII and Appendix XII-A.3). The variability factor is a measure of the daily fluctuation of the effluent pollutant concentration and is measured by the ratio of concentration to its long-term average. Given the lognormality of the discharge concentration, the equation to calculate the variability factor (Equation (1) of Chapter XII) is

$$\log(VF) = Z(\text{Sigma}) - 1.15(\text{Sigma})^2 \qquad (1)$$

where VF = the variability factor

Z = 2.326 (99th percentile of the standard normal distribution)

Sigma = the standard deviation of the log of the observations

The derivation of this equation is set out below.

C = concentration of metal or pollutant in discharge

A = average of concentration

= μ (C)

σ = standard deviation of the logarithm of C

= σ (log C)

μ = average of the logarithm of C

= μ (log C)

Z = standard normal variable.

In the following calculations, the use of "log" or the subscript "10" refers to common logarithms (base 10). When μ and σ do not appear with a subscript, they refer to the mean and standard deviation of ln(C) (i.e., the natural logarithm of C).

It is assumed that C follows a lognormal distribution. Therefore, log C is normally distributed. Thus:

$$Z = \frac{\log C - \mu_{10}}{\sigma_{10}} \tag{2}$$

or

$$\log C = \mu_{10} + Z\sigma_{10} \tag{3}$$

According to Aitchison and Brown*:

$$A = e^{(\mu + 0.5\sigma^2)} \tag{4}$$

This equation follows directly from lognormal properties. Equation (4) is now conveniently converted to the common logarithm (base 10).

$$\log A = \mu_{10} + 1.15\sigma^2_{10} \quad (\text{since } \ln(y) = \log(y) \times 2.3026) \tag{5}$$

Substituting (3) and (5) into

$$\log (C/A) = \log C - \log A \tag{6}$$

gives

$$\log (C/A) = Z\sigma_{10} - 1.15\sigma^2_{10} \tag{7}$$

---

* Aitchison, J. and Brown, J.A.C., The Lognormal Distribution, Cambridge University Press, London, Page 8, 1969.

Finally, replacing C/A and σ_{10} with their sample estimates, VF and Sigma, respectively, and Z by 2.326 (99th percentile of standard normal distribution), in Equation (7) results in the variability factor equation, Equation (1).

APPENDIX XII-A.2

DERIVATION OF THE N-DAY-AVERAGE VARIRABILITY FACTOR

The variability factor for the N-day-average for N greater than or equal to two was estimated from the following equation:

$$\log (C_N/A) = Z\sigma^*_N - 1.15\sigma^{*2}_N \quad (1)$$

where

C_N = average concentration of N daily observations

A = average of concentration

σ^*_N = adjusted standard deviation for the logarithm of the concentrations used for the N-day-average (derived below)

Z = 2.326 (99th percentile of the standard normal distribution).

Assume X, concentration of a pollutant in the discharge, to be lognormal with μ and σ as the mean and standard deviation of ln(X). Then, based on lognormal properties:

$$E(X) = e^{\mu + \frac{1}{2}\sigma^2} \quad (2)$$

$$Var(X) = e^{2\mu + \sigma^2}(e^{\sigma^2} - 1) \quad (3)$$

For the N-day-average, $\overline{X}_N$, where each X is independent:

$$E(\overline{X}_N) = E(X) \quad (4)$$

$$Var(\overline{X}_N) = \frac{Var(X)}{N} \quad (5)$$

It was then assumed that $\bar{X}_N$ follows a lognormal distribution with parameters μ'_N and σ'_N. The assumption, though theoretically invalid (since distribution of $\bar{X}_N$ is unknown), was made in order to approximate the true distribution of $\bar{X}_N$ in the upper tail of the distribution and, based on this approximation, to obtain estimates of the standard deviation, variability factor and limitation of the N-day-average. The validity of this assumption was examined later by comparing the 99th percentile of the empirical distribution of $\bar{X}_N$ with the 99th percentile based on the lognormality assumption and Equation (1).

Since $\bar{X}_N$ is assumed to be lognormal, E $(\bar{X}_N)$ and Var $(\bar{X}_N)$ are given by:

$$E\ (\bar{X}_N) = e^{(\mu'_N + \frac{1}{2}\sigma'^2_N)} \tag{6}$$

$$Var\ (\bar{X}_N) = e^{(2\mu'_N + \sigma'^2_N)} (e^{\sigma'^2_N} - 1) \tag{7}$$

Using equations (2), (3), (4), (5), (6), and (7),

μ'_N and σ'^2_N are derived in terms of μ and σ as:

$$\mu'_N = \mu + \frac{\sigma^2}{2} - \frac{1}{2} \ln\ (1 + \frac{e^{\sigma^2} - 1}{N}) \tag{8}$$

$$\sigma'^2_N = \ln\ (1 + \frac{e^{\sigma^2} - 1}{N}) \tag{9}$$

where σ is the standard deviation of the natural logarithm of the observations. Finally, σ'_N is transformed back to the log (base 10) by the following expression.

$$\sigma^*_N = \sigma'_N \times \frac{1}{2.3026} \quad (\text{since } \ln(y) = \log(y) \times 2.3026) \tag{10}$$

This parameter σ^*_N, the assumption of lognormality stated above, and the theory in Appendix XII-A.1 result in Equation (1).

Calculation of the N-Day-Average Variability Factor

The N-day-average variability factor, VF_N, is an estimate of C_N/A and is obtained from:

$$\log (VF_N) = Z\ Sigma_N - 1.15\ (Sigma_N)^2 \tag{11}$$

where $Sigma_N$ is an estimate of σ^*_N. Sigma can be obtained indirectly from the variability factor, VF, calculated in Equation (1) of Appendix XII-A.1. Sigma can be found by substituting VF into this equation. This, in turn, can be transformed into the estimate of σ, the standard deviation of the natural logarithm of the observations, using the relation:

$$\ln(y) = \log(y) \times 2.3026 \tag{12}$$

This estimate is substituted in Equation (9) to obtain an estimate of σ'_N. Applying Equation (12) to the last estimate gives the desired value, $Sigma_N$.

Accuracy of the Approximation Used to Derive the N-Day-Average Variability Factor

In the derivation of Equation (1), the average concentration of N daily samples (N-day-average) was assumed to follow a lognormal distribution, given that the daily concentration also followed a lognormal distribution. This assumption was made in order to approximate the 99th percentile of the true and unknown distribution of the N-day-average. This assumption is justified for a given mean and variance if the 99th percentile of an empirically derived distribution of the N-day-average is not significantly different from the 99th percentile based on Equation (1). A description of such a comparison and its results are given below. Note that the conclusions are valid only within the range of the values of the parameters tested and only in the upper tail (specifically the 99th percentile) of the distribution.

The validity of the lognormality assumption and thus of Equation (1) was checked by generating large sets of random lognormal numbers with given μ and σ (mean and standard deviation of the logarithm of the observations) and calculating the 99 percent limits of N-day-averages based on these empirical distributions. Fifteen samples for N=2, 5, and 30, of size 1,000, 400, and 70, respectively, were generated. For two different sets of parameter values the 99 percent limits derived from these samples were then compared with the 99 percent limits calculated from Equation (1). These parameters were the extremes of the values for the long term averages (LTA) and sigmas used in the calculation of pollutant limitations. For each of the 15 samples corresponding to each value of N (2, 5, and 30), the proportion of empirically generated N-day averages greater than or equal to the 99 percent limits directly estimated from Equation (1) was calculated. The means and standard deviations of the proportions for the 2, 5, and 30-day averages were also calculated (Exhibit A.2.). Since the 99th percentile based on Equation (1) is identical with the 99th percentile derived empirically

if the above proportion has the value 0.01, the means of the proportions for the three N-day sizes of both cases were tested for significant departure from 0.01. In all cases the t-values or indicators of departure were observed to be insignificant. These figures are reported in Exhibit A.2. This analysis, therefore, indicates that Equation (1) is suitable for estimating variability factors and N-day-average limitations.

EXHIBIT A.2.

PROPORTION OF EMPIRICAL N-DAY-AVERAGES GREATER THAN OR EQUAL TO THE 99 PERCENT LIMITATION BASED ON EQUATION (1)

CASE I

Parameter Values:

$\sigma_{10}^{+} = 0.19$

LTA = 4.2

	N = 2	N = 5	N = 30
Mean	0.0106	0.0100	0.0086
Standard Deviation	0.0037	0.0055	0.0118
t Value	0.62	0	-0.99
α*	0.6	1.0	0.4

CASE II

Parameter Values:

$\sigma_{10}^{+} = 0.377$

LTA = 0.15

	N = 2	N = 5	N = 30
Mean	0.0099	0.0087	0.0114
Standard Deviation	0.0025	0.0060	0.0134
t Value	-0.15	-0.84	0.40
α*	0.9	0.4	0.7

+ Standard deviation of the logarithm of the concentrations.

* Approximate level of significance.

APPENDIX XII-A.3

FURTHER VERIFICATION OF THE LOGNORMALITY ASSUMPTION AND THE VARIABILITY FACTOR EQUATION

The assumption of lognormality was central to derivation of the variability factor used in the calculation of the pollutant limitations. Other than applying standard tests such as Kolmogorov-Smirnov and Kuiper tests, the appropriateness of the lognormal distribution has also been examined through a useful analytical procedure.

Let:

C = concentration of metal

A = average of concentration

$= \mu\ (C)$

σ = standard deviation of the logarithm of C

$= \sigma\ (\log C)$

μ = average of the logarithm of C

$= \mu\ (\log C)$

Z = 2.326 (99th percentile of the standard normal distribution).

Based on the assumption of the lognormality of C, and using distributional properties, two theoretical formulas for determining variability factors are:

$$(C/A') = \frac{10 \exp(\mu_{10} + Z\sigma_{10})}{A} \tag{1}$$

$$\log\ (C/A^{*}) = Z\sigma_{10} - 1.15\sigma_{10}^{2} \tag{2}$$

where

C, A, and Z are given above

μ_{10}, σ_{10} = mean and standard deviation of the logarithms (base 10) of the concentrations, respectively.

If lognormality holds, the two formulas are equivalent, i.e., will give identical results. However, actual pollutant discharges will only approximate lognormality, and the closeness of such approximation will be reflected in the discrepancy between VF´ and VF*, estimates of (C/A´) and (C/A*), respectively. The smaller this discrepancy, the better the approximation. A comparison of VF´and VF* can therefore be used as an indicator of the appropriateness of the lognormality assumption.

The above procedure has been applied on discharges of common metals for various plants, and the results are summarized in Exhibit A.3. A comparison of VF´and VF* values reveals that they are quite close for most of the plants (e.g., 89 percent of the plants had absolute difference between VF´ and VF* less than 0.5). This suggests that the lognormality assumption and the variability factor equations, based on this assumption, are reasonable. In light of this evidence, the assumption of lognormality used in the derivation of the variability factor equations is reasonable.

EXHIBIT A.3

COMPARISON OF TWO DIFFERENT ESTIMATES OF THE VARIABILITY FACTORS

Plant ID	Metal	$\hat{A}^+$	$\hat{\mu}_{10}^+$	$\hat{\sigma}_{10}^+$	VF′	VF*
13	Cu	0.20	-0.76	0.23	3.03	3.03
13	Ni	0.27	-0.60	0.17	2.28	2.26
13	Zn	0.41	-0.42	0.19	2.52	2.49
13	Cr	1.11	-0.08	0.39	6.21	5.48
14	Cu	0.14	-0.98	0.36	5.22	4.88
14	Ni	0.65	-0.30	0.38	5.86	5.23
14	Zn	0.30	-0.58	0.24	3.08	3.05
14	Cr	0.53	-0.49	0.52	9.75	7.84
14	Cd	0.13	-0.99	0.34	4.77	4.48
116	Cu	0.32	-0.71	0.42	5.82	5.91
116	Ni	0.35	-0.65	0.41	5.88	5.81
116	Cr	0.98	-0.08	0.26	3.34	3.31
637	Cu	4.92	0.60	0.27	3.53	3.54
637	Ni	2.00	0.11	0.43	6.55	6.15
637	Ag	1.60	0.06	0.36	4.95	4.90
804	Cu	0.06	-1.27	0.23	2.91	2.99
804	Ni	0.03	-1.73	0.34	4.15	4.50
804	Cr	0.13	-1.06	0.37	4.86	4.97
804	Cd	0.01	-2.28	0.22	2.80	2.86
804	Pb	0.03	-1.50	0.15	2.09	2.08
1208	Cu	0.66	-0.26	0.28	3.68	3.61
1208	Zn	0.59	-0.29	0.22	2.90	2.90
1208	Cr	0.54	-0.33	0.28	3.72	3.57
1570	Zn	0.67	-0.20	0.18	2.40	2.36
1570	Cr	0.71	-0.17	0.17	2.29	2.26
1924	cu	1.46	0.05	0.32	4.26	4.21
1924	Ni	0.12	-0.92	0.11	1.77	1.77
1924	Zn	0.14	-0.92	0.23	2.88	3.02

(continued on next page)

EXHIBIT A.3 (Continued)

Plant ID	Metal	$\hat{A}^+$	$\hat{\mu}_{10}{}^+$	$\hat{\sigma}_{10}{}^+$	VF'	VF*
1924	Pb	0.05	-1.34	0.22	2.81	2.80
2070	Cu	0.71	-0.22	0.25	3.33	3.28
2088	Cu	0.43	-0.44	0.28	3.82	3.69
2088	Ni	0.75	-0.16	0.18	2.41	2.40
2088	Zn	0.26	-0.66	0.28	3.67	3.60
2088	Cr	0.86	-0.11	0.19	2.49	2.49
2501	Cu	0.05	-1.34	0.19	2.61	2.57
2501	Ni	0.11	-1.01	0.20	2.57	2.58
2501	Zn	0.15	-1.04	0.43	5.95	6.13
2501	Cr	0.03	-1.70	0.37	4.84	5.00
3301	Cu	0.63	-0.39	0.49	8.71	7.23
3301	Ni	0.30	-0.65	0.33	4.45	4.39
3301	Zn	3.10	-0.17	0.80	15.90	13.34
3301	Cr	0.32	-0.70	0.42	5.95	5.99
3301	Cd	0.10	-1.27	0.50	7.51	7.49
3311	Cu	2.21	0.26	0.22	2.64	2.81
3311	Cr	0.37	-0.74	0.48	6.42	7.07
3315	Cu	0.10	-1.03	0.15	2.15	2.15
3315	Ni	0.27	-0.60	0.19	2.56	2.52
3315	Cr	0.22	-0.75	0.29	3.99	3.83
3320	Cu	1.99	0.21	0.28	3.64	3.60
3320	Ni	0.17	-0.99	0.49	8.24	7.36
3320	Zn	0.81	-0.23	0.38	5.35	5.14
3320	Cr	0.52	-0.45	0.37	4.90	4.99
3320	Cd	0.04	-1.50	0.39	6.05	5.36
3324	Cu	0.30	-0.56	0.18	2.47	2.45
3324	Zn	0.35	-0.58	0.27	3.19	3.51
3324	Cr	0.18	-0.78	0.22	2.91	2.82

+ $\hat{A}$, $\hat{\mu}_{10}$ and $\hat{\sigma}_{10}$ are estimates of A, μ_{10} and σ_{10} in mg/l.

APPENDIX XII-A.4

SAMPLE CORRELATION COEFFICIENTS TO SUPPORT INCLUSION OF PLANTS IN THE ESTIMATION OF THE VARIABILITY FACTORS

In estimating the variability factors of pollutants, plants that did not, on the average, achieve levels as low as those achieved by most of the plants in the data base were included. This is justified since the average and standard deviation of the logarithm of the concentrations are not significantly correlated for those plants used in the analysis of the variability factor for each pollutant. Thus, including or excluding poorer-than-average plants should not affect the results.

Exhibit A.4 presents sample correlations between the mean and standard deviations of the logarithm of the concentrations for regulated pollutants, based on the plants included for estimating the variability factors. It can be seen from Exhibit A.4 that none of the pollutants showed significant correlations based on a two tailed test with a significance level of .10. These results support the inclusion of plants with high average concentrations for estimating the variability factors.

EXHIBIT A.4

SAMPLE CORRELATIONS BETWEEN THE PLANT AVERAGE AND STANDARD DEVIATION OF THE LOGARITHM OF THE DAILY CONCENTRATIONS

Pollutant	Data Source*	No. of Obs.	Sample Correlation	Upper 5% Critical Value
CN,A	Table 12-4	6	-0.093	0.621
CN,T	Table 12-3	8	-0.444	0.549
Cr,VI	Table 12-6	12	-0.432	0.457
Cu	Ex.A.3	18	0.192	0.412
Zn	Ex.A.3	14	0.030	0.497
Ni	Ex.A.3	13	0.016	0.476
Cr,T	Ex.A.3	16	-0.341	0.441
Other	Ex.A.3	9	0.272	0.582

*Tables in chapter XII or exhibits in Appendix XII.

APPENDIX XII-A.5

PRESENTATION AND JUSTIFICATION OF A SIMPLIFIED METHOD FOR OBTAINING N-DAY-AVERAGE MAXIMUM LIMITATIONS

N-day-average maximum limitations (L_N) can be obtained by multiplying the N-day-average variability factor (VF_N), derived in Appendix XII-A.2, by the long term average (LTA). However, this approach requires lengthy calculations. In order to simplify these calculations, the following equation was used.

$$L_N = L_{30} + K_N (L - L_{30}) \qquad [1]$$

where

L and L_{30} are daily and 30-day-average maximum limitations derived in the section on Statistical Methodology in Chapter XII, and K_N are constants determined empirically from Exhibit A.5.

Exhibit A.5 lists N-day-average limitations obtained by equation [2].

$$L_N' = LTA \times VF_N \qquad [2]$$

for each of the 10 regulated pollutants and for N = 1, 2, 3, ... 30.

From this table, K_N values were calculated and substituted into Equation [1] to obtain the limitations of Table 12-23 in Chapter XII. Note that in comparing Exhibit A.5 with this table, of the 110 limitations (for N = 2, 3,...29) a large majority (72%) are the same and only the two limitations marked by an asterisk differ by an absolute value of 2 in the last significant digit.

EXHIBIT A.5

SUMMARY OF LIMITATIONS† CALCULATED USING EQUATION [2]

Day (N)	N-Day Average Maximum Pollutant Limitations† mg/l									
	CN, T	Cu	Cr, T	Ni	Zn	TRM	Ag	Cd	Pb	CN, A
1	.75	4.5	7.0	4.1	4.2	10.5	1.2	1.2	.6	5.0
2	.55	3.4	5.2	3.2	3.2	8.3	.9	.9	.4	3.7
3	.46	3.0	4.5	2.8	2.8	7.4	.8	.8	.4	3.1
4	.41	2.7	4.0	2.6	2.6	6.9	.7	.7	.4	2.8
5	.38	2.6	3.7	2.4	2.4	6.6	.7	.7	.3	2.5
6	.35	2.4	3.5	2.3	2.3	6.4	.6	.6	.3	2.4
7	.34	2.3	3.4	2.2	2.2	6.2*	.6	.6	.3	2.2
8	.32	2.3	3.3	2.2	2.2	6.0*	.6	.6	.3	2.1
9	.31	2.2	3.2	2.1	2.1	5.9	.6	.6	.3	2.1
10	.30	2.2	3.1	2.1	2.1	5.8	.6	.6	.3	2.0
15	.27	2.0	2.8	1.9	1.9	5.5	.5	.5	.3	1.8
20	.25	1.9	2.7	1.9	1.9	5.3	.5	.5	.3	1.7
30	.23	1.8	2.5	1.8	1.8	5.0	.5	.5	.3	1.5

*Last significant figure differs by an absolute value of 2 from corresponding values Table 12-23.

†For purposes of comparison with limitations in Table 12-23 in chapter VII only, and not to be used for purposes of regulation.

APPENDIX XII-B

DATA BASE OF THE ELECTROPLATING CATEGORY

APPENDIX XII-B

DATA BASE OF THE ELECTROPLATING CATEGORY

Appendix XII-B provides information necessary to replicate the regression equations of Table 12-8, which are used in the analysis of the limitations for Cu, Cr,T, Ni, Zn, Cd and Pb. Exhibit B.1 presents the Hamilton Standard plants used in the calculation of the regression coefficients, and the specific metals each plant plated. Exhibit B.2 presents the additional 22 Hamilton Standard plants used to obtain the 75 percentile Xme in order to calculate the limitations for these metals, and the metals plated by each plant. Exhibit B.3 presents the data necessary to replicate the regression equations which are used to calculate the limitations for the metals listed above. A list of units and abbreviations for Exhibits XII-B.3 is at the end of Appendix XII.

EXHIBIT B.1

PLANTS USED IN CALCULATION OF
REGRESSION EQUATIONS OF TABLE 12-8

Plant ID	Operations Generating				
	Cr	Cu	Ni	Zn	TRM
13	+	+	+		+
14	+	+	+	+	+
6037		+	+		+
6074	+		+		+
6075		+	+	+	+
6081	+	+	+		+
6083	+		+	+	+
6085	+	+	+	+	+
6086	+		+		+
6087	+	+	+	+	+
15070	+	+		+	+
20010	+		+		+
20077	+	+	+	+	+
20078	+	+	+	+	+
20079	+	+	+	+	+
20080	+			+	+
20081	+	+	+	+	+
20082	+	+	+	+	+
20084	+		+	+	+
20086	+	+	+	+	+
31021	+	+	+	+	+
33024	+	+		+	+
33050		+		+	+
33073	+	+	+	+	+
36040	+	+	+		+
	22	19	21	18	25

EXHIBIT B.2

ADDITIONAL PLANTS USED IN THE CALCULATION OF THE 75 PERCENTILE Xme

Plant ID	Operations Generating Cr	Cu	Ni	Zn	TRM
4045	+	+	+	+	+
6073	+	+	+	+	+
6076	+	+	+	+	+
6078	+	+	+	+	+
6079	+		+		+
6084	+	+	+	+	+
6088	+	+	+	+	+
6089		+	+		+
6731	+	+	+	+	+
9026		+		+	+
10020		+	+	+	+
11050		+			+
19050		+			+
19051		+	+		+
31020	+	+	+	+	+
33070	+	+	+	+	+
33071	+	+	+	+	+
36041	+	+	+	+	+
38050	+		+		+
40061	+	+	+		+
40062	+	+	+		+
44050	+	+	+	+	+
	15	20	19	13	22

EXHIBIT B.3.1

COPPER RAW DATA IN $\mu g/l$

Plant ID	Date	Effluent Cu	Effluent TSS	Effluent pH	Flow	Raw Waste Load Cu	Raw Waste Load TSS	Raw Waste Load pH	Raw Waste Load PM
6037	770216	4490	42000	1000	6360	8249	82000	910	16993
6037	770217	5930	39000	890	6360	7689	72000	850	12938
6075	761102	2230	20000	1010	4854	20609	92000	980	35517
6075	761103	4060	26000	1040	6360	20609	114000	1010	39478
6075	761104	2230	12000	1030	6600	19409	146000	970	64111
6081	761020	750	100	850	3120	1893	2392	132	4454
6081	761021	650	4000	850	3720	1614	333	126	6584
6081	761022	850	1000	850	4500	4882	333	105	12643
6085	770209	5130	40000	1150	3600	6429	108000	1150	33534
6085	770210	3290	16000	1190	4039	12509	298000	1170	64401
6087	770216	1940	44000	1180	2706	49309	344000	1140	119025
6087	770217	5000	74000	830	3682	98209	320000	780	212684
6087	770218	2630	34000	920	2966	80009	392000	990	179868
15070	761102	20	12000	890	2739	59	920000	930	309254
15070	761103	20	21000	860	1980	47	904000	1050	200379
15070	761104	16	25000	970	2260	41	504000	1000	101155
20077	760811	625	18000	970	23400	17409	100000	740	69439
20077	760812	562	17000	950	21360	7239	47000	650	65893
20077	760915	474	21000	975	29160	2839	150000	985	42985
20077	760916	316	15000	960	19440	2339	132000	940	36906
20082	760826	206	49600	950	5511	2354	206566	938	34796
20082	760928	6160	36000	940	5375	8705	217814	897	43711
20082	760929	2149	36100	920	5375	4563	197581	913	36239
20082	760930	3359	36400	930	5917	5359	264874	895	40462
20086	770119	250	21000	1030	1600	94809	2768000	1070	429110
20086	770120	469	33000	1030	1600	107009	3500000	1140	459234
31021	761214	1680	14000	790	6801	213009	1912000	850	471015
31021	761215	2940	33000	820	6829	101009	974000	830	218670
31021	761216	1740	21000	940	6375	60009	748000	930	134667
33024	750200	160	42000	850	3336	1620	251500	850	16853
33050	750300	147	12000	1000	5908	286	5270000	910	20246
33073	761012	301	28000	1130	2047	20009	266000	810	107675
33073	761013	7680	39000	1120	2746	47709	148000	800	201665
33073	761014	1110	85000	1170	2185	3249	432000	960	114436
36040	761109	60	8000	900	1050	1399	45000	670	169870
36040	761110	71	14000	910	1250	10209	194000	720	150808
36040	761111	76	11000	920	1250	6219	66000	700	141738
20078	760817	307	14000	1010	2102	7699	21000	260	215176
20078	760818	247	32000	1030	1690	7699	9000	270	208803
20078	760819	372	37000	1160	1722	8319	16000	250	209446
20078	760921	400	56000	1180	1995	12409	38000	410	193284
20078	760922	400	55000	1090	2200	11409	10000	380	215561
20078	760923	400	38000	1070	2069	8169	2000	280	166365
20079	760817	824	78000	930	476	1539	3420000	1010	892423
20079	760818	470	130000	960	619	538	3236000	1000	29343
20079	760819	412	132000	910	789	1359	2804000	910	771878
20079	760901	115	76000	960	498	1189	2180000	1000	654380
20079	760902	147	96000	950	555	1069	2176000	1030	650249
20081	760818	29	100	840	2040	31418	64944	666	91595
20081	760817	27	100	830	2208	17520	37035	578	95342
20081	760819	42	32000	840	3900	17520	37035	578	95342
20081	760921	26	2000	760	1440	3621	9126	489	99084
20081	760922	24	7000	790	1440	17520	37035	578	95342
20081	760923	26	2000	860	5280	17520	37035	578	95342
20081	760924	700	12000	880	3180	17520	37035	578	95342
13	750527	770	11000	890	2500	8609	500000	920	129275
13	750528	560	13000	920	2500	9909	436000	920	110205
13	750529	400	8000	920	2500	669	494000	930	143755
13	750530	300	8000	900	2500	36009	517	910	160685
13	750709	890	2000	830	2500	439	356	770	125275
13	750711	180	200	820	2500	469	306000	770	115725
14	750602	330	2000	850	17261	1909	89000	850	21954
14	750603	190	3000	820	15277	4109	94000	870	28654
14	750604	340	1000	820	11359	3709	186000	910	88054
14	750605	120	2000	820	19345	6709	192000	870	49254
14	750606	100	2000	820	16041	2909	102000	860	27854
14	750708	70	82000	820	12696	4109	175000	850	66954
14	750710	110	1000	820	12733	2109	136000	850	43964
14	750801	40	400	890	19472	5609	476000	980	65154

See last page of Appendix for abbreviations and units.

EXHIBIT B.3.2

CHROMIUM RAW DATA IN $\mu g/l$

Plant ID	Date	Effluent Cr	Effluent TSS	Effluent pH	Flow	Raw Waste Load Cr	Raw Waste Load TSS	Raw Waste Load pH	Raw Waste Load PM
6074	761026	333	46000	890	2100	98009	9970000	1040	1697153
6074	761027	143	21000	890	2100	85309	4410000	930	749036
6074	761028	714	26000	1060	2100	104009	8340000	1080	1216765
6081	761020	170	100	850	3120	979	2392	132	4454
6081	761021	155	4000	850	3720	679	333	126	6584
6081	761022	102	1000	850	4500	537	333	105	12643
6083	770104	1220	136000	800	3287	8089	340000	790	126717
6083	770105	556	22000	830	2626	12209	472000	820	189108
6085	770209	1950	40000	1150	3600	4889	108000	1150	33534
6085	770210	1630	16000	1190	4039	7409	298000	1170	64401
6086	770105	7610	42000	1140	226	15409	72000	1080	25275
6086	770106	13600	120000	1190	264	16409	79000	1130	22156
6086	770107	21000	108000	1060	202	16409	132000	1040	27917
6087	770216	59	44000	1180	2706	362	344000	1140	119025
6087	770217	75	74000	830	3682	362	320000	780	212684
6087	770218	52	34000	920	2966	656	392000	990	179868
15070	761102	4250	12000	890	2739	195009	920000	930	309254
15070	761103	3750	21000	860	1980	88009	904000	1050	200379
15070	761104	7370	25000	970	2260	50609	504000	1000	101155
20077	760811	78	18000	970	23400	691	100000	740	69439
20077	760812	166	17000	950	21360	10809	47000	650	65893
20077	760915	739	21000	975	29160	4789	150000	985	42985
20077	760916	435	15000	960	13440	2959	132000	940	36906
20080	760817	195	5000	970	4038	142009	10000	690	206669
20080	760818	168	10	940	2262	93681	876370	508	250358
20080	760819	396	17000	960	2262	133535	1015653	628	296830
20080	760820	300	17000	960	2262	200009	1596000	970	299115
20080	760914	739	17000	930	2900	133009	1628000	1010	218411
20080	760915	609	18000	940	3050	140009	1144000	1020	252229
20080	760916	783	13000	960	2850	240009	2484000	990	433988
20082	760826	526	49600	950	5511	17732	206566	938	34796
20082	760928	838	36000	940	5375	26281	217814	897	43711
20082	760929	687	36100	920	5375	20160	197581	913	36239
20082	760930	798	36400	930	5917	26141	264874	895	40462
20086	770119	944	21000	1030	1600	65509	2768000	1070	429110
20086	770120	1720	33000	1030	1600	78509	3500000	1140	459234
31021	761214	128	14000	790	6801	15509	1912000	850	471015
31021	761215	230	33000	820	6829	9609	974000	830	218670
31021	761216	200	21000	940	6375	7289	748000	930	134667
33024	750200	70	42000	850	3336	345	251500	850	16853
33073	761012	1110	28000	1130	2047	63909	266000	810	107675
33073	761013	2630	39000	1120	2746	123009	148000	800	201665
33073	761014	2120	85000	1170	2185	62309	432000	960	114436
36040	761109	533	8000	900	1050	25309	45000	670	169870
36040	761110	733	14000	910	1250	29409	194000	720	150808
36040	761111	333	11000	920	1250	24709	66000	700	141738
20010	760810	50	28000	1172	4765	18209	2000	110	160234
20010	760811	20	14000	1170	6128	10609	8000	110	146484
20010	760812	41	53000	1170	7089	13909	13000	110	137114
20010	760831	30	80000	1150	5817	14709	24000	210	190566
20010	760901	17	12000	1140	5989	12609	28000	190	356596
20010	760902	27	110000	1120	6060	11609	42000	190	136330
20078	760817	400	14000	1010	2102	117009	21000	260	215176
20078	760818	500	32000	1030	1690	117009	9000	270	208803
20078	760819	2600	37000	1160	1722	117009	16000	250	209446
20078	760921	826	56000	1180	1995	94409	38000	410	193284
20078	760922	1090	55000	1090	2200	106009	10000	380	215561
20078	760923	1640	38000	1070	2069	76709	2000	280	166365
20079	760817	2300	78000	930	476	469009	3420000	1010	892423
20079	760818	4370	130000	960	619	4949	3236000	1000	29343
20079	760819	9920	132000	910	789	439009	2804000	910	771878
20079	760901	1600	76000	960	498	316009	2180000	1000	654380
20079	760902	1870	96000	950	555	295009	2176000	1030	650249
20081	760818	289	100	840	2040	5843	64944	666	91595
20081	760817	80	100	830	2208	19747	37035	578	95342
20081	760819	1050	32000	840	3900	19747	37035	578	95342
20081	760921	64	2000	760	1440	33650	9125	489	99084
20081	760922	43	7000	790	1440	19747	37035	578	95342
20081	760923	235	2000	860	5280	19747	37035	578	95342
20081	760924	783	12000	880	3180	19747	37035	578	95342
20084	761001	125	55000	1000	74	9529	206000	1000	65779
20084	761105	7760	33000	1100	60	1839	53000	1100	101075
13	750527	1700	11000	890	2500	63009	500000	920	129275
13	750528	1400	13000	920	2500	53009	436000	920	110205
13	750529	1500	8000	920	2500	86009	494000	930	143755
13	750530	1800	8000	900	2500	70009	517	910	150685
13	750709	3500	2000	830	2500	86009	356	770	125275
13	750711	1800	200	820	2500	74009	306000	770	115725
14	750602	1500	2000	850	17261	4609	89000	850	21954
14	750603	370	3000	820	15277	3709	94000	870	29654
14	750604	230	1000	820	11359	11009	186000	910	88054
14	750605	180	2000	820	19345	5809	192000	870	49254
14	750606	660	2000	820	16041	5409	102000	860	27854
14	750708	1200	82000	820	12696	6109	175000	850	66954
14	750710	990	1000	820	12733	7509	136000	850	43964
14	750801	370	400	890	19472	8409	476000	980	65154

See last page of Appendix for abbreviations and units.

EXHIBIT B.3.3

NICKEL RAW DATA IN μg/l

Plant ID	Date	Effluent NI	Effluent TSS	Effluent pH	Flow	Raw Waste Load Ni	Raw Waste Load TSS	Raw Waste Load pH	Raw Waste Load PM
6037	770216	2770	42000	1000	6360	5749	82000	910	16993
6037	770217	1880	39000	890	6360	2479	72000	850	12938
6074	761026	304	46000	890	2100	167009	9970000	1040	1697153
6074	761027	600	21000	890	2100	94309	4410000	930	749036
6074	761028	571	26000	1060	2100	128009	8340000	1080	1216765
6075	761102	3870	20000	1010	4854	7859	92000	980	35517
6075	761103	1500	26000	1040	6360	10809	114000	1010	39478
6075	761104	2880	12000	1030	6600	37409	146000	970	64111
6081	761020	95	100	850	3120	95	2392	132	4454
6081	761021	80	4000	850	3720	218	333	126	6584
6081	761022	105	1000	850	4500	256	333	105	12643
6083	770104	1080	136000	800	3287	7229	340000	790	126717
6083	770105	2270	22000	830	2626	9339	472000	820	189108
6085	770209	6670	40000	1150	3600	12809	108000	1150	33534
6085	770210	2000	16000	1190	4039	21409	298000	1170	64401
6086	770105	4280	42000	1140	226	8169	72000	1080	25275
6086	770106	3130	120000	1190	264	4419	79000	1130	22156
6086	770107	12500	108000	1060	202	10009	132000	1040	27917
6087	770216	7300	44000	1180	2706	50009	344000	1140	119025
6087	770217	7720	74000	830	3682	81409	320000	780	212684
6087	770218	6390	34000	920	2966	73009	392000	990	179868
20077	760811	1310	18000	970	23400	16509	100000	740	69439
20077	760812	1080	17000	950	21360	10209	47000	650	65893
20077	760915	1250	21000	975	29160	6269	150000	985	42985
20077	760916	750	15000	960	19440	8009	132000	940	36906
20082	760826	6032	49600	950	5511	8464	206566	938	34796
20082	760928	1406	36000	940	5375	3466	217814	897	43711
20082	760929	901	36100	920	5375	3042	197581	913	36239
20082	760930	530	36400	930	5917	2674	264874	895	40462
20086	770119	286	21000	1030	1600	37809	2768000	1070	429110
20086	770120	357	33000	1030	1600	41109	3500000	1140	459234
31021	761214	1120	14000	790	6801	82809	1912000	850	471015
31021	761215	2120	33000	820	6829	30009	974000	830	218670
31021	761216	875	21000	940	6375	12509	748000	930	134667
33073	761012	332	28000	1130	2047	14309	266000	810	107675
33073	761013	1620	39000	1120	2746	16809	148000	800	201665
33073	761014	964	85000	1170	2185	20909	432000	960	114436
36040	761109	1560	8000	900	1050	142009	45000	670	169870
36040	761110	1780	14000	910	1250	108009	194000	720	150808
36040	761111	778	11000	920	1250	108009	66000	700	141738
20010	760810	200	28000	1172	4765	100009	2000	110	160234
20010	760811	230	14000	1170	6128	103009	8000	110	146484
20010	760812	422	53000	1170	7089	91409	13000	110	137114
20010	760831	237	80000	1150	5817	140009	24000	210	190566
20010	760901	175	12000	1140	5989	310009	28000	190	356596
20010	760902	156	110000	1120	6060	96409	42000	190	136330
20078	760817	144	14000	1010	2102	85309	21000	260	215176
20078	760818	106	32000	1030	1690	78709	9000	270	208803
20078	760819	427	37000	1160	1722	78709	16000	250	209446
20078	760921	489	56000	1180	1995	82009	38000	410	193284
20078	760922	262	55000	1090	2200	92309	10000	380	215561
20078	760923	381	38000	1070	2069	76909	2000	280	166365
20079	760817	63750	78000	930	476	94309	3420000	1010	892423
20079	760818	6130	130000	960	619	6139	3236000	1000	29343
20079	760819	5250	132000	910	789	120009	2804000	910	771878
20079	760901	2120	76000	960	498	180009	2180000	1000	654380
20079	760902	2000	96000	950	555	130009	2176000	1030	650249
20081	760818	70	100	840	2040	44765	64944	566	91595
20081	760817	128	100	830	2208	49031	37035	578	95342
20081	760819	3500	32000	840	3900	49031	37035	578	95342
20081	760921	125	2000	760	1440	53297	9126	489	99084
20081	760922	90	7000	790	1440	49031	37035	578	95342
20081	760923	320	2000	860	5280	49031	37035	578	95342
20081	760924	388	12000	880	3180	49031	37035	578	95342
20084	761001	1440	55000	1000	74	3129	206000	1000	65779
20084	761105	212	33000	1100	60	321	53000	1100	101075
13	750527	920	11000	890	2500	45009	500000	920	129275
13	750528	920	13000	920	2500	42009	436000	920	110205
13	750529	600	8000	920	2500	51009	494000	930	143755
13	750530	370	8000	900	2500	50009	517	910	160685
13	750709	300	2000	830	2500	34009	356	770	125275
13	750711	250	200	820	2500	35009	306000	770	115725
14	750602	1700	2000	850	17261	3709	89000	850	21954
14	750603	840	3000	820	15277	4009	94000	870	28654
14	750604	790	1000	820	11359	6109	186000	910	88054
14	750605	740	2000	820	19345	5709	192000	870	49254
14	750606	80	2000	820	16041	5509	102000	860	27854
14	750708	400	82000	820	12696	7109	175000	850	66954
14	750710	900	1000	820	12733	5909	136000	850	43964
14	750801	380	400	890	19472	4509	476000	980	65154

See last page of Appendix for abbreviations and units.

EXHIBIT B.3.4

ZINC RAW DATA IN μg/l

Plant ID	Date	Effluent Zn	Effluent TSS	Effluent pH	Flow	Raw Waste Load Zn	Raw Waste Load TSS	Raw Waste Load pH	Raw Waste Load PM
6075	761102	833	20000	1010	4854	5719	92000	980	35517
6075	761103	1170	26000	1040	6360	6009	114000	1010	39478
6075	761104	722	12000	1030	6600	4799	146000	970	64111
6083	770104	303	136000	800	3287	2329	340000	790	126717
6083	770105	166	22000	830	2626	3719	472000	820	189108
6085	770209	1060	40000	1150	3600	2259	108000	1150	33534
6085	770210	258	16000	1190	4039	4219	298000	1170	64401
6087	770216	1000	44000	1180	2706	11209	344000	1140	119025
6087	770217	1750	74000	830	3682	22509	320000	780	212684
6087	770218	1120	34000	920	2966	17509	392000	990	179868
15070	761102	1330	12000	890	2739	103009	920000	930	309254
15070	761103	3120	21000	860	1980	100009	904000	1050	200379
15070	761104	3000	25000	970	2260	42609	504000	1000	101155
20077	760811	2760	18000	970	23400	29009	100000	740	69439
20077	760812	3240	17000	950	21360	33009	47000	650	65893
20077	760915	3000	21000	975	29160	23509	150000	985	42985
20077	760916	1800	15000	960	19440	19109	132000	940	36906
20080	760817	375	5000	970	4038	59409	10000	690	206669
20080	760818	333	10	940	2262	60673	876370	508	250358
20080	760819	500	17000	960	2262	74507	1015653	628	296830
20080	760820	542	17000	960	2262	82809	1596000	970	299115
20080	760914	700	17000	930	2900	75409	1628000	1010	218411
20080	760915	500	18000	940	3050	64309	1144000	1020	252229
20080	760916	500	13000	960	2850	101009	2484000	990	433988
20082	760826	112	49600	950	5511	4457	206566	938	34796
20082	760928	121	36000	940	5375	4120	217814	897	43711
20082	760929	618	36100	920	5375	5379	197581	913	36239
20082	760930	257	36400	930	5917	4968	264874	895	40462
20086	770119	470	21000	1030	1600	192009	2768000	1070	429110
20086	770120	882	33000	1030	1600	197009	3500000	1140	459234
31021	761214	1000	14000	790	6801	134009	1912000	850	471015
31021	761215	3130	33000	820	6829	63809	974000	830	218670
31021	761216	1190	21000	940	6375	47109	748000	930	134667
33024	750200	1090	42000	850	3336	11989	251500	850	16853
33050	750300	771	12000	1000	5908	9037	5270000	910	20246
33073	761012	80	28000	1130	2047	6579	266000	810	107675
33073	761013	533	39000	1120	2746	11609	148000	800	201665
33073	761014	533	85000	1170	2185	8529	432000	960	114436
20078	760817	29	14000	1010	2102	4679	21000	260	215176
20078	760818	33	32000	1030	1690	4899	9000	270	208803
20078	760819	83	37000	1160	1722	4899	16000	250	209446
20078	760921	32	56000	1180	1995	3899	38000	410	193284
20078	760922	24	55000	1090	2200	5229	10000	380	215561
20078	760923	40	38000	1070	2069	4119	2000	280	166365
20079	760817	1250	78000	930	476	252009	3420000	1010	892423
20079	760818	2820	130000	960	619	4949	3236000	1000	29343
20079	760819	2730	132000	910	789	158009	2804000	910	771878
20079	760901	2250	76000	960	498	112009	2180000	1000	654380
20079	760902	2250	96000	950	555	191009	2176000	1030	650249
20081	760818	583	100	840	2040	934	64944	666	91595
20081	760817	667	100	830	2208	2978	37035	578	95342
20081	760819	750	32000	840	3900	2978	37035	578	95342
20081	760921	600	2000	760	1440	5021	9126	489	99084
20081	760922	500	7000	790	1440	2978	37035	578	95342
20081	760923	400	2000	860	5280	2978	37035	578	95342
20081	760924	600	12000	880	3180	2978	37035	578	95342
20084	761001	800	55000	1000	74	5119	206000	1000	65779
20084	761105	10000	33000	1100	60	64409	53000	1100	101075
14	750602	100	2000	850	17261	6109	89000	850	21954
14	750603	360	3000	820	15277	11009	94000	870	28654
14	750604	320	1000	820	11359	34009	186000	910	88054
14	750605	340	2000	820	19345	21009	192000	870	49254
14	750606	250	2000	820	16041	7609	102000	860	27854
14	750708	150	82000	820	12696	28009	175000	850	66954
14	750710	400	1000	820	12733	21009	136000	850	43964
14	750801	170	400	890	19472	36009	476000	980	65154

See last page of Appendix for abbreviations and units.

EXHIBIT B.3.5

TOTAL REGULATED METALS RAW DATA IN $\mu g/l$

Plant		Effluent				Raw Waste Load			
ID	Date	TRM	TSS	pH	Flow	TRM	TSS	pH	PM
6037	770216	7338	42000	1000	6360	14127	82000	910	16993
6037	770217	7914	39000	890	6360	10325	72000	850	12938
6074	761026	715	46000	890	2100	266366	9970000	1040	1697153
6074	761027	799	21000	890	2100	180586	4410000	930	749036
6074	761028	1315	26000	1060	2100	233214	8340000	1080	1216765
6075	761102	7034	20000	1010	4854	34297	92000	980	35517
6075	761103	6973	26000	1040	6360	37992	114000	1010	39478
6075	761104	6276	12000	1030	6600	62459	146000	970	64111
6081	761020	1095	100	850	3120	3275	2392	132	4454
6081	761021	937	4000	850	3720	2747	333	126	6584
6081	761022	1100	1000	850	4500	6980	333	105	12643
6083	770104	2900	136000	800	3287	18433	340000	790	126717
6083	770105	3139	22000	830	2626	25473	472000	820	189108
6085	770209	14810	40000	1150	3600	26386	108000	1150	33534
6085	770210	7178	16000	1190	4039	45546	298000	1170	64401
6086	770105	12174	42000	1140	226	23955	72000	1080	25275
6086	770106	16991	120000	1190	264	21075	79000	1130	22156
6086	770107	33770	108000	1060	202	26769	132000	1040	27917
6087	770216	10299	44000	1180	2706	110889	344000	1140	119025
6087	770217	14545	74000	830	3682	202489	320000	780	212684
6087	770218	10192	34000	920	2966	171183	392000	990	179868
15070	761102	5650	12000	890	2739	298166	920000	930	309254
15070	761103	6930	21000	860	1980	188154	904000	1050	200379
15070	761104	10431	25000	970	2260	93318	504000	1000	101155
20077	760811	4773	18000	970	23400	63618	100000	740	69439
20077	760812	5048	17000	950	21360	61266	47000	650	65893
20077	760915	5463	21000	975	29160	37406	150000	985	42985
20077	760916	3301	15000	960	19440	32416	132000	940	36906
20080	760817	616	5000	970	4038	202059	10000	690	206669
20080	760818	567	10	940	2262	155041	876370	508	250358
20080	760819	1593	17000	960	2262	209629	1015653	628	296830
20080	760820	1362	17000	960	2262	285076	1596000	970	299115
20080	760914	1590	17000	930	2900	209524	1628000	1010	218411
20080	760915	1355	18000	940	3050	205424	1144000	1020	252229
20080	760916	1573	13000	960	2850	342900	2484000	990	433988
20082	760826	6876	49600	950	5511	33007	206566	938	34796
20082	760928	8525	36000	940	5375	42572	217814	897	43711
20082	760929	4355	36100	920	5375	33144	197581	913	36239
20082	760930	4944	36400	930	5917	39142	264874	895	40462
20086	770119	1950	21000	1030	1600	390136	2768000	1070	429110
20086	770120	3428	33000	1030	1600	423636	3500000	1140	459234
31021	761214	3929	14000	790	6801	445336	1912000	850	471015
31021	761215	8420	33000	820	6829	204436	974000	830	218670
31021	761216	4005	21000	940	6375	126916	748000	930	134667
33024	750200	1339	42000	850	3336	14059	251500	850	16853
33050	750300	985	12000	1000	5908	9483	5270000	910	20246

(continued on next page)

EXHIBIT B.3.5 (Continued)

Plant ID	Date	Effluent TRM	Effluent TSS	Effluent pH	Flow	Raw Waste Load TRM	Raw Waste Load TSS	Raw Waste Load pH	Raw Waste Load PM
33073	761012	1823	28000	1130	2047	104806	266000	810	107675
33073	761013	12463	39000	1120	2746	199136	148000	800	201665
33073	761014	4727	85000	1170	2185	94996	432000	960	114436
36040	761109	2177	8000	900	1050	169459	45000	670	169870
36040	761110	2600	14000	910	1250	148766	194000	720	150808
36040	761111	1200	11000	920	1250	139813	66000	700	141738
20010	760810	418	28000	1172	4765	119298	2000	110	160234
20010	760811	354	14000	1170	6128	114152	8000	110	146484
20010	760812	676	53000	1170	7089	105856	13000	110	137114
20010	760831	335	80000	1150	5817	156381	24000	210	190566
20010	760901	402	12000	1140	5989	324608	28000	190	356596
20010	760902	215	110000	1120	6060	108753	42000	190	136330
20078	760817	880	14000	1010	2102	214696	21000	260	215176
20078	760818	886	32000	1030	1690	208316	9000	270	208803
20078	760819	3482	37000	1160	1722	208936	16000	250	209446
20078	760921	1747	56000	1180	1995	192726	38000	410	193284
20078	760922	1776	55000	1090	2200	214956	10000	380	215561
20078	760923	2461	38000	1070	2069	165906	2000	280	166365
20079	760817	68124	78000	930	476	816866	3420000	1010	892423
20079	760818	13790	130000	960	619	16575	3236000	1000	29343
20079	760819	18312	132000	910	799	718386	2804000	910	771878
20079	760901	6085	76000	960	498	609216	2180000	1000	654380
20079	760902	6267	96000	950	555	617096	2176000	1030	650249
20081	760818	971	100	840	2040	82960	64944	666	91595
20081	760817	902	100	830	2208	89276	37035	578	95342
20081	760819	5342	32000	840	3900	89276	37035	578	95342
20081	760921	815	2000	760	1440	95589	9126	489	99084
20081	760922	657	7000	790	1440	89276	37035	578	95342
20081	760923	981	2000	860	5280	89276	37035	578	95342
20081	760924	2471	12000	880	3180	89276	37035	578	95342
20084	761001	3130	55000	1000	74	18610	206000	1000	65779
20084	761105	18057	33000	1100	60	66648	53000	1100	101075
13	750527	3690	11000	890	2500	128636	500000	920	129275
13	750528	3120	13000	920	2500	109736	436000	920	110205
13	750529	2750	8000	920	2500	143296	494000	930	143755
13	750530	2700	8000	900	2500	160136	517	910	160685
13	750709	5030	2000	830	2500	124766	356	770	125275
13	750711	2410	200	820	2500	114896	306000	770	115725
14	750602	3630	2000	850	17261	16336	89000	850	21954
14	750603	1760	3000	820	15277	22836	94000	870	28654
14	750604	1680	1000	820	11359	54836	186000	910	88054
14	750605	1380	2000	820	19345	39236	192000	870	49254
14	750606	1090	2000	820	16041	21436	102000	860	27854
14	750708	1820	82000	820	12696	45336	175000	850	66954
14	750710	2400	1000	820	12733	36536	136000	850	43964
14	750801	960	400	890	19472	54536	476000	980	65154

See last page of Appendix for abbreviations and units.

EXHIBIT B.3.6

CADMIUM RAW DATA IN μg/l

Plant ID	Date	Effluent Cd	Effluent TSS	Effluent pH	Flow	Raw Waste Load Cd	Raw Waste Load TSS	Raw Waste Load pH	Raw Waste Load PM
6081	761020	214	100	850	3120	424	2392	132	4454
6081	761021	190	4000	850	3720	373	333	126	6584
6081	761022	190	1000	850	4500	1557	333	105	12643
6087	770216	14	44000	1180	2706	39	344000	1140	119025
6087	770217	13	74000	830	3682	31	320000	780	212684
6087	770218	13	34000	920	2966	31	392000	990	179868
14	750602	80	2000	850	17261	1309	89000	850	21954
14	750603	180	3000	820	15277	2109	94000	870	28654
14	750604	220	1000	820	11359	5209	186000	910	88054
14	750605	250	2000	820	19345	2209	192000	870	49254
14	750606	170	2000	820	16041	2409	102000	860	27854
14	750708	30	82000	820	12696	2609	175000	850	66954
14	750710	120	1000	820	12733	919	136000	850	43964
14	750801	50	400	890	19472	1409	476000	980	65154

EXHIBIT B.3.7

LEAD RAW DATA IN μg/l

Plant ID	Date	Effluent Pb	Effluent TSS	Effluent pH	Flow	Raw Waste Load Pb	Raw Waste Load TSS	Raw Waste Load pH	Raw Waste Load PM
6083	770104	280	136000	800	3287	2189	340000	790	126717
6083	770105	160	22000	830	2626	2509	472000	820	189108
6087	770216	85	44000	1180	2706	1009	344000	1140	119025
6087	770217	151	74000	830	3682	1509	320000	780	212684
6087	770218	65	34000	920	2966	1129	392000	990	179868
20079	760817	62	78000	930	476	1259	3420000	1010	892423
20079	760818	38	130000	960	619	59	3236000	1000	29343
20079	760819	50	132000	910	789	40	2804000	910	771878
20079	760901	85	76000	960	498	1209	2180000	1000	654380
20079	760902	80	96000	950	555	1109	2176000	1030	650249

See last page of Appendix for abbreviations and units.

APPENDIX XII-C

DATA BASE FOR PLANTS USING FILTERS FOR SEPARATION OF SOLIDS FROM EFFLUENT STREAM

APPENDIX XII-C

DATA BASE FOR PLANTS USING FILTERS FOR SEPARATION OF SOLIDS FROM EFFLUENT STREAM

Exhibit C.1 presents the plants visited and sampled by the Agency that use filtration systems for separation of precipitated metals from electroplating wastes, as well as the metals plated and any additional waste treatment processes operated by each of these plants. The data for the 10 plants used in the analysis of the performance of filtration systems are listed in Exhibit C.2. A list of units and abbreviations of Exhibit C.2 is at the end of Appendix XII.

EXHIBIT C.1

PLANTS USING FILTERS FOR SEPARATION
OF SOLIDS FROM EFFLUENT STREAM

Plant ID	Operations Generating Cr	Cu	Ni	Zn	Additional Waste Treatment
5050 (a)					Ion Exchange
6076	+	+	+	+	Clarification
6077		+	+	+	Lancy
6079	+		+	+	
6089 (b)		+	+		Lagoon;Lancy
6731	+	+	+	+	
9026		+		+	
11050 (c)		+			
19051 (d)		+	+		Lancy
20077	+	+	+	+	Clarification
31020	+	+	+	+	Pptn tank clarifier
31021	+	+	+	+	Clarification
33070	+	+	+	+	Clarification
33073	+	+	+	+	Clarification
33074	+	+	+		Lancy
36041	+	+	+	+	
36062 (e)		+	+		Evaporation
38050	+		+		
40061	+	+	+		Ion Exchange
40062	+	+	+		Lagoon; Evaporation of Cr

(a) Filter used on floor spill sludge.
(b) Lancy followed by filter for stripping line wastes; others to lagoon.
(c) Bright dip only. Filter used on floor spill sludge.
(d) Performs chemical milling only.
(e) Printed Circuit subcategory.

EXHIBIT C.2

DATA FOR ANALYSIS OF METALS TREATMENT USING FILTRATION IN $\mu g/l$

		Effluent						Raw Waste Load				
Plant ID	Date	Cr, III	Cu	Ni	Zn	PM	TSS	Cr, III	Cu	Ni	Zn	PM
6079	761130	930	93	889	110	2658	1000	18832	587	19600	138	42577
6079	761201	734	40	1330	78	2536	31000	16740	300	21300	393	43442
6079	761202	542	36	733	40	1852	21000	18540	210	20900	144	44010
6731	761117	42	647	1110	304	2391	6000	132	647	1440	5070	11940
6731	761118	0	258	1000	889	2387	1000	954	941	2220	9910	18164
6731	761119	28	588	1890	889	3798	4000	359	1650	3890	19200	32981
9026	761207	3	2250	116	3060	5737	11000	73	52400	299	22400	190331
9026	761208	5	4170	102	706	5278	15000	81	63800	341	27600	258980
9026	761209	7	2200	107	882	3804	67000	81	63800	377	30600	220020
20077	760810	813	375	846	2470	5382	11000	6277	6400	8440	29000	54595
20077	760811	95	875	1620	3300	7875	23000	662	17400	16500	29000	69347
20077	760812	161	250	692	1760	4419	9000	10787	7230	10200	33000	65808
20077	760914	1145	789	1500	3600	8468	26000	7329	6280	5000	16100	38981
20077	760915	658	473	1250	2800	6189	17000	4753	2830	6260	23500	42886
20077	760916	410	316	875	2000	4613	11000	2928	2330	8000	19100	36812
31020	761214	13	1000	120	18	1554	16000	115995	108000	27500	18800	534259
31021	761214	81	800	1000	375	2661	7000	7855	20400	2000	8000	40121
31021	761215	83	1420	1620	1380	4912	18000	7630	12700	1000	9820	33083
31021	761216	91	1580	750	1060	3911	21000	4755	12300	1000	13600	33592
33070	761019	439	58	95	95	1024	13000	26995	1000	400	1850	31636
33070	761020	462	131	120	108	1372	92000	29995	2420	382	2230	36794
33070	761021	549	84	80	105	1028	100	22918	1580	406	1920	28573
33073	761012	939	12	235	48	4747	32000	63895	20000	14300	6570	107598
33073	761013	828	317	256	48	2494	4000	122995	47700	16800	11600	201588
33073	761014	939	91	150	48	12653	42000	62295	3240	20900	8520	114359
36041	770118	460	1890	320	765	4179	32000	28595	26500	5000	18700	91818
36041	770119	606	444	44	139	1662	10000	12195	7530	2570	13400	43683
36041	770120	328	1060	571	430	3625	5000	24979	9560	4490	14300	100263
38050	750200	769	158	350	121	1969	142500	577	167	7062	138	15975

See last page of Appendix for abbreviations and units.

APPENDIX XII-D

DATA BASE OF THE ELECTROLESS PLATING AND PRINTED CIRCUIT BOARD SUBCATEGORIES

APPENDIX XII-D

DATA BASE OF THE ELECTROLESS PLATING AND PRINTED CIRCUIT BOARD SUBCATEGORIES

Exhibit D.1 presents the data prepared by Hamilton Standard, which were used for the analysis of nickel within the Electroless subcategory. Exhibit D.2 presents the data prepared by Hamilton Standard, which were used for the analysis of copper within the Printed Circuit Board subcategory. A list of units and abbreviations for Exhibits D.1 and D.2 is at the end of Appendix XII.

EXHIBIT D.1

DATA FOR NICKEL PLATED IN ELECTROLESS SUBCATEGORY IN μg/l

		Effluent				Raw Waste Load		
Plant ID	Date	Ni	TSS	pH	Flow	Ni	TSS	pH
4077	760204	24500	50000	770	9600	24500	38000	550
4077	760205	21000	162000	750	9480	23800	23000	540
6051	0	67	9000	0	22000	192	131000	0
6081	761020	95	100	850	3120	86	2392	132
6081	761021	80	4000	850	3720	209	333	126
6081	761022	105	1000	850	4500	247	333	105
6381	761026	3330	11000	752	13900	32200	228000	746
6381	761027	5120	26000	750	11690	34400	452000	750
6381	761028	5240	56000	760	12680	25600	96000	750
12065	603730	9230	23000	700	20833	9650	48000	650
12065	603740	9230	23000	760	20833	11500	80000	730
20064	751008	2386	108000	920	5917	71360	1552000	485
20064	751009	3216	26000	910	5385	45120	240000	525
20069	760219	18406	138779	1140	11028	49587	44272	665
20070	760831	327	9000	950	3540	30000	676000	880
20070	760901	750	18000	940	3720	28000	736000	910
20070	760921	533	6000	920	3225	28900	592000	940
20070	760922	889	7000	890	3420	36400	724000	890
20070	760923	53	4000	890	3540	36400	720000	880
20070	760205	65	6000	890	3568	53400	13000	230
20070	760206	36	17000	885	3678	38600	17000	250
20073	760824	2250	43000	820	18300	65200	632000	510
20073	760825	448	11000	790	16425	53800	702000	570
20073	760826	478	14000	810	18168	52500	712000	550
20073	760914	1380	44000	850	18769	102000	300000	480
20073	760915	1120	38000	930	17363	78200	53000	490
20073	760916	1120	33000	450	18305	89700	124000	860
20083	760824	5130	145000	960	4416	103000	24000	265
20083	760825	907	34000	915	3153	153000	18000	280
20083	760826	767	27000	920	4245	82800	15000	230
20083	760928	808	9000	990	4833	97100	16000	250
20083	760929	462	6000	850	4780	111000	3000	250
20083	760930	4750	97000	950	4658	87100	10000	250
20085	761116	1330	29000	920	4500	193000	664000	730
20085	761117	1330	32000	870	4200	147000	768000	650
20085	761118	667	21000	900	3900	127000	1122000	1100
23061	751021	312	4000	710	1154	378	67000	720
23061	751022	114	15000	735	1154	737	201000	750
30074	760210	48700	29000	410	2288	27595	16727	290
30074	760211	48700	21000	370	2288	29441	13045	303
41067	7412	930	31000	900	375	0	0	0
41069	760204	160	100	270	828	162	11000	270
41069	760205	162	17000	870	828	211	100	680

See last page of Appendix for abbreviations and units.

EXHIBIT D.2

RAW DATA FOR COPPER PLATED IN THE PRINTED CIRCUIT BOARD SUBCATEGORY IN $\mu g/l$

Plant ID	Date	Effluent Cu	Effluent TSS	Effluent pH	Flow	Raw Waste Load Cu	Raw Waste Load TSS	Raw Waste Load ph
2062	751007	1455	50000	900	2100	0	0	0
2062	751008	1591	31000	950	1500	0	0	0
4065	500711	898	16000	690	1200	6423	38000	835
4065	500721	380	27000	635	1200	4549	59000	700
4069	751001	727	15000	960	13920	4352	44606	572
4069	751002	776	4000	940	15840	8437	55268	848
5020	761116	206	58000	860	1818	9530	10000	270
5020	761117	1470	234000	920	1620	14700	54000	960
5020	761118	165	5000	800	1380	7670	26000	760
5020	770111	1850	34000	760	1658	2859	4473	352
5020	770112	900	24000	690	1681	19478	11473	344
5020	770113	1300	15000	700	1406	2625	10595	407
5021	761130	3820	24000	760	4800	4620	7000	940
5021	761201	1740	20000	680	4820	1580	5000	310
5021	761202	1200	24000	840	4020	2890	1000	470
17061	750916	1833	1000	620	8000	8197	14000	640
17061	750917	1197	6000	730	8000	3714	23000	640
19063	761130	4880	34000	690	3993	17700	50000	1230
19063	761130	2780	6000	710	979	3650	12000	230
19063	761201	2210	14000	710	3996	16200	86000	1230
19063	761201	2160	10000	800	940	8150	100000	220
19063	761202	3590	6000	690	3980	17900	152000	1200
19063	761202	3280	16000	800	964	8460	86000	190
30050	750200	39614	100	680	23520	1202029	43463	606
36062	750924	479	58000	885	2058	535700	360000	885
36062	750925	101	58000	760	2050	382900	263000	820

See last page of Appendix for abbreviations and units.

APPENDIX XII-E

DATA BASE USED TO OBTAIN MASS-BASED PRETREATMENT STANDARDS

APPENDIX XII-E

DATA BASE USED TO OBTAIN MASS-BASED PRETREATMENT STANDARDS

Exhibits E.1, E.2, and E.3 present the data prepared by Hamilton Standard, that are needed to calculate the median water usage for the Electroplating Category and Electroless Plating and Printed Circuit Board subcategories, respectively. A list of units and abbreviations for Exhibits E.1, E.2, and E.3 are at the end of Appendix XII.

EXHIBIT E.1

DATA FROM ELECTROPLATING CATEGORY FOR MASS BASED LIMITATIONS

Plant ID	Date	Flow	Area
6037	770215	6350	6530
6037	770216	6360	5884
6037	770217	6360	5512
6074	761026	2100	972
6074	761027	2100	972
6074	761028	2100	972
6075	761102	4854	3284
6075	761103	6360	3913
6075	761104	6600	3703
6081	761020	3120	2291
6081	761021	3720	2284
6081	761022	4500	2498
6083	770104	3287	105
6083	770105	2626	105
6083	770106	2174	105
6084	770104	3200	2639
6084	770105	2450	2613
6084	770106	2190	2565
6085	770209	3600	2469
6085	770210	4039	3105
6085	770211	3769	2448
6086	770105	226	2774
6086	770106	264	2774
6086	770107	202	2774
6087	770216	2706	26263
6087	770217	3682	25775
6087	770218	2966	26047
6088	770126	430	449
6088	770127	530	686
6088	770128	530	511
10020	770201	6722	4851
10020	770202	5689	1896
10020	770203	7295	5730
15070	761102	2739	3653
15070	761103	1980	4863
15070	761104	2260	3839
19050	750200	2702	1032
20077	760810	17700	43856
20077	760811	23400	40348
20077	760812	21360	46527
20077	760914	29160	53512
20077	760915	29160	57735
20077	760916	19440	50335
20080	760817	4038	43167
20080	760818	2262	41111
20080	760819	2262	39055
20080	760820	2262	44808
20080	760914	2900	21583
20080	760915	3050	20556
20080	760916	2850	19528
20082	760824	4725	5182
20082	760825	5583	5516
20082	760826	5511	5283
20082	760928	5375	6600
20082	760929	5375	6129
20082	760930	5917	6357
20086	770118	1600	2485
20086	770119	1600	2005
20086	770120	1600	2989
31021	761214	6801	6173
31021	761215	6829	7262
31021	761216	6375	6722
31050	750200	575	775
33024	750200	3336	6983

(continued on next page)

EXHIBIT E.1 (Continued)

Plant ID	Date	Flow	Area
33050	750300	5908	6840
33073	761012	2047	3185
33073	761013	2746	2593
33073	761014	2185	2889
36040	761109	1050	1199
36040	761110	1250	1199
36040	761111	1250	1199
44050	750300	14220	40
4045	770111	6000	4711
4045	770112	6000	9626
4045	770113	6000	4535
6073	761019	2472	1547
6073	761020	1932	1116
6073	761021	1752	1645
6078	761207	5947	0
6078	761208	6339	0
20010	760810	4765	14377
20010	760811	6128	18932
20010	760812	7089	14585
20010	760831	5817	16796
20010	760901	5989	17161
20010	760902	6060	16796
20078	760817	2102	3278
20078	760818	1690	2112
20078	760819	1722	2058
20078	760921	1995	3230
20078	760922	2200	3233
20078	760923	2069	3515
20079	760817	476	11782
20079	760818	619	12129
20079	760819	789	11957
20079	760831	606	11105
20079	760901	498	10514
20079	760902	555	13708
20081	760818	2040	1121
20081	760817	2208	1121
20081	760819	3900	1121
20081	760921	1440	975
20081	760922	1440	975
20081	760923	5280	975
20081	760924	3180	975
20084	761001	74	2613
20084	761022	46	1491
20084	761105	60	2608
33071	761019	1498	2897
33071	761020	2449	2720
33071	761021	1745	2696
13	750527	2500	4227
13	750528	2500	1610
13	750529	2500	2800
13	750530	2500	3442
13	750709	2500	2394
13	750711	2500	1993
14	750602	17261	7013
14	750603	15277	8277
14	750604	11359	7725
14	750605	19345	4352
14	750606	16041	6332
14	750708	12696	11137
14	750710	12733	9602
14	750725	13106	4832
14	750728	13732	2803
14	750730	17475	5727
14	750801	19472	5901

See last page of Appendix for abbreviations and units.

EXHIBIT E.2

DATA FROM ELECTROLESS SUBCATEGORY FOR MASS BASED LIMITATIONS

Plant ID	Date	Flow	Area
4077	760204	9600	3275
4077	760205	9480	3275
6051	0	22000	7865
6081	761020	3120	2291
6081	761021	3720	2284
6081	761022	4500	2498
6381	761026	13900	18408
6381	761027	11690	16338
6381	761028	12680	16338
12065	603730	20833	11451
12065	603740	20833	11451
20064	751008	5917	23208
20064	751009	5385	23388
20069	760219	11028	19060
20070	760831	3540	4366
20070	760901	3720	3737
20070	760921	3225	3688
20070	760922	3420	3804
20070	760923	3540	3746
20070	760205	3568	4063
20070	760206	3678	4063
20073	760824	18300	31434
20073	760825	16425	30600
20073	760826	18168	28322
20073	760914	18769	39703
20073	760915	17363	29353
20073	760916	18305	33563
20083	760824	4416	7574
20083	760825	3153	7966
20083	760826	4245	7448
20083	760928	4833	7025
20083	760929	4780	6274
20083	760930	4658	7056
20085	761116	4500	19920
20085	761117	4200	19056
20085	761118	3900	19488
23061	751021	1154	19
23061	751022	1154	27
30074	760210	2288	5263
30074	760211	2288	5263
41067	7412	375	141
41069	760204	828	239
41069	760205	828	239

See last page of Appendix for abbreviations and units.

EXHIBIT E.3

DATA FROM PRINTED CIRCUIT BOARD SUBCATEGORY FOR MASS BASED LIMITATIONS

Plant ID	Date	Flow	Area
2062	751007	2100	1032
2062	751008	1500	1032
4065	500711	1200	343
4065	500721	1200	343
4069	751001	13920	7116
4069	751002	15840	7116
5020	761116	1818	1159
5020	761117	1620	1159
5020	761118	1380	1159
5020	770111	1658	1589
5020	770112	1681	1589
5020	770113	1406	1589
5021	761130	4800	2633
5021	761201	4820	2537
5021	761202	4020	957
17061	750916	8000	1153
17061	750917	8000	1153
19063	761130	3993	1811
19063	761130	979	1811
19063	761201	3996	1811
19063	761201	940	1811
19063	761202	3980	1811
19063	761202	964	1811
30050	750200	23520	0
36062	750924	2058	716
36062	750925	2050	1217

See last page of Appendix for abbreviations and units.

ABBREVIATIONS AND UNITS

I.D.	Identification Number of Plants
Date	Date Sampled (example: 760618 = 6/18/76 = June 18, 1976)
TSS	Total Suspended Solids (μg/l)
Flow	Flow in Gallons per Hour
pH	pH of Waste Stream x 100
PM	Precipitable Metals* (μg/l)
TRM	Total Regulated Metals (μg/l) = Cu + Ni + Cr,T + Zn
Area	Area Plated in Square Feet per Hour.

*Precipitable Metals is the sum of (Cu + Cr,T + Zn + Ni + Cd + Pb + Ag + Hg + Fe + Sn) in the Raw Waste Load.

SECTION XIII

ACKNOWLEDGEMENTS

The Environmental Protection Agency was aided in the preparation of this Development Document by Hamilton Standard, Division of United Technologies Corporation. Hamilton Standard's effort was managed by Mr. Daniel J. Lizdas and Mr. Walter M. Drake and included significant contributions by Messrs. Eric Auerbach, Robert Blaser, Jeffrey Wehner, Richard Kearns, Robert Lewis, Joel Parker, William Starkel, Robert Pacocha, Jeffrey Robert and Robert Patulak.

Mr. Devereaux Barnes and Mr. Bill Hanson of the EPA's Effluent Guidelines Division served as Project Officers during the development of limitations and the preparation of this document. Mr. Robert Schaeffer, Director Effluent Guidelines Division, Mr. Ernst P. Hall, Branch Chief, Metals and Machinery Branch, and Mr. Harold B. Coughlin, Branch Chief, Effluent Guidelines Implementation, offered guidance and suggestions during this project.

Acknowledgement and appreciation is also given to Ms. Kaye Starr, Ms. Carol Swann and Ms. Nancy Zrubek of the word processing staff, Ms. Helena Pohorylo and Ms. Diane Boucher of Hamilton Standard, and those of the secretarial and administrative staff of the Effluent Guidelines Division who worked so diligently to prepare, edit, publish and distribute the manuscript.

Finally, appreciation is also extended to those plating, metal finishing and printed board industry associations and plants that participated in and contributed data for the formulation of this document.

SECTION XIV

REFERENCES

1. Adams, F. "Getting the Most Out of Vacuum Metalizing", Products Finishing, Gardner Publications Inc., Cincinnati, Ohio. November, 1977, pp. 43-51.

2. Agrawal, J. P., and Sourirajan, S., "Reverse Osmosis Separation of Some Inorganic Salts in Aqueous Solution Containing Mixed Solutes With a Common Ion", Pub. in Ind. Eng. Chem. Process Design and Development, National Research Council of Canada Ottawa (Ontario) Div of Chemistry, November 1968.

3. Allen, J. B., Clapham, T. M., Joyce, R. S., and Sukenid, V. A., "Use of Granular Regenerable Carbon for Treatment of Secondary Effluent, Engineering Design and Economic Evaluation", Final Rept., Pittsburg Activated Carbon Co., Pa., October 1964.

4. Allen, T. A., Processing Prototype PC Boards at Sandia Laboratories, Alburquerque, Report No. (SC-DS-70-4807), (Sandia Labs., Alburqueque, N. Mex.), (nd), 9p.

5. Allied Chemical Company and Aluminum Company of America, "Chromic Acid Anodizing of Aluminum", AES Illustrated Lecture Series, American Electroplaters Society, Inc., Winter Park, FL. 1973.

6. Alonzo, William Lawrence, "Design of Wastewater Treatment Systems to Satisfy Effluent Quality Requirements Based on Intended Use", Technical Rept., Cornell Univ., Ithaca, N. Y. Water Resources and Marine Science Center, September 1971.

7. An Investigation of Techniques for Removal of Cyanide From Electroplating Wastes, Water Pollution Control Research Series, Battelle Columbus Labs., Ohio, Grant, November 1971.

8. ASM Committe, Nonelectrolytic Nickel Plating, Revised Edition, Metals Handbook, Vol. 2, 8th Edition, 1964.

9. Aycock, T. I., "Effects of Stabilizing Additives on the Micro-structure and Properties of Electroless Copper Deposits", West Electr., Richmond, Va., Huie, N. C., Krauss, George, Metal Trans, Vol. 5, No. 5, May 1974 pp. 1215-1233.

10. Bailey, D. A., et al., "The Influence of Trivalent Chromium on the Biological Treatment of Domestic Sewage", Water Poll. Control Eng., (G.B.), Vol. 69, 1970, pp. 100.

11. Baker, R.G. et al, "Gold Electroplating Part 2", AES Illustrated Lecture Series, American Electroplaters Society, Inc., Winter Partk, FL. 1978.

12. Banks, Harvey O., Inerfield, Arthur J., Wolfe, Charles G., Tucker, David L., and Harris, Philip G., "Economic and Institutional Analysis of Wastewater Reclamation and Reuse Projects", Final Rept., Leeds, Hill and Jewett, Inc., San Francisco, Calif., December 1971.

13. Balligand, P., Huyghe, J., Lauro, F., Vignet, P., Distillation Cycle and the Combination of Processes Which Are Applicable to Large-Capacity Desalination Plants, Geneva, Switzerland, September 1971.

14. Barth, E. F., et al., "Field Survey of Four Municipal Wastewater Treatment Plants Receiving Metallic Wastes", Jour. Water Poll. Control Fed., Vol. 37, 1965, pp. 1101.

15. Barth, E. F., et al, "Summary Report on the Effects of Heavy Metals on the Biological Treatment Processes", Jour.Water Poll. Control Fed., Vol. 37, 1965, pp. 86.

16. Bashaw, J. D., Lawson, J. K., and Orofino, T. A., "Hollow Fiber Technology for Advanced Waste Treatment", Environmental Production Technology Series, Chemstrand Research Center, Inc., Durham, N.C., December 1972.

17. Basiulis, A., and Shefsiek, P. K., inventors (to NASA), Method for Distillation of Liquids, Filed December 14, 1970, pp. 16 U.S. Patent Appl. SN 97829.

18. Bellis, H.E. and Pearlstein, F., "Electroless Plating of Metals", AES Illustrated Lecture Series, American Electroplaters Society, Inc., Winter Park, FL. 1972.

19. Bennion, Douglas N., and Newman, John., "Electrochemical Removal of Copper from Very Dilute Solutions", Journal of Applied Electrochemistry, 2, 113-122, 1972.

20. Berger, C., Guter, G. A., and Belfort, G., "Study of Electrical Analogue for Electrodialysis", Research and Development Progress Rept., February 1967.

21. Bergman, Jacob I., Anthes, David E., and Braman, Robert S., "Electrodialysis Process Using Inorganic Ion Exchange Membranes", Department of the Interior, Washington, D. C. December 1966.

22. Bergmann, J. I., "Applicaton of Inorganic Ion-Exchange Membranes to Electrodialysis", Research and Development Progress Rept., IIT Research Inst., Chicago, Ill., March 1966.

23. Bezler, P., Hendire, J. M., Hoffman, K. C., Oltman, A., and Reich, M., "Design Studies on Multistage Flash Distillation Vessels", Research and Development Progress Rept., Brookhaven National Lab., Upton, N.Y., July 1971.

24. Bishop, H. K., "Use of Improved Membranes in Tertiary Treatment by Reverse Osmosis", Water Pollution Control Research Series, McDonnell Douglas Astronautics Co., Newport Branch, Calif., Astropower Lab., December 1970.

25. Brackett, D. W., "Waste Water Recycling Process", IBM tech Disclosure Bull., February 1974.

26. Brideport Plating Co., Inc., "The Art of Plating on Plastic", Product Finishing, June 1975, pp. 545-554.

27. Brimi, Ma. A., Luck, J. R., Electrofinishing, American Elsevier Publishing Company, Inc., New York, 1965.

28. Brock, John L., Fahey, Peter M., Miller, Christian S., and Spatz, C. Dean., "Development of Low Pressure Design of a Small Unit for Brackish Water", Research and Development Progress Rept., Dartmouth Coll., Hanover, N. H., June 1969.

29. Brown, C. J., et al., "Plating Waste Recovery by Reciprocating-flow Ion Exchange", Technical Conference of the American Electroplater's Society, Minneapolis, Minnesota, June 18, 1973.

30. Bull, P. S., and Evans, J. V., "Cation-Exchange Removal of Copper from Ammoniacal Aqueous Solutions", Australian Atomic Energy Commission Research Establishment, March 1973.

31. Burnham, P. C., "Automated Plating Heart of New Printed Circuit Facility", Plating, pp. 106-108.

32. Byrne, J. P., and Anderson, A., "Supporting Development for the Preliminary Design of an Intermediate Water Recovery

System", AirResearch Mfg., Co., Los Angeles, Calif., August 1969.

33. Carter, R. C., "Printed CLAD-A-TIVE Circuitry", (Fortin Laminating Corp., San Fernado, Calif.), In: New Industries and Applications for Advanced Materials Technology", Proceedings of the Nineteenth National Symposium and Exhibition, Buena Park, Calif., April 23-25, 1974, Azusa, Calif., Society for the Advancement of Material and Process Engineering, 1974, pp. 671-677.

34. Caudle, Danny D., Tucker, John H., Cooper, Jerry L., Arnold, Bill B., and Papastamataki, A., "Electrochemical Demineralization of Water with Carbon Electrodes", Research and Development Progress Rept., Oklahoma Univ., Research Inst., November 1966.

35. Cefola, M., "Kinetics and Structural Studies of Chelates-Diketones with Transition and Rare Earth Metals", Report No. (NYO-906-87), Progress Report, April 1, 1969 - March 31, 1970. (Fordham Univ., New York Dept. of Chemistry), January 21, 1970.

36. Ceresa, M., and Lancy, L. E., "Electroplating Waste Disposal, Part I", Electroplating, 66 (5), 60-65, May 1968.

37. Ceresa, M., and Lancy, L. E., "Electroplating Waste Disposal, Part II", Electroplating, 66 (6) 112-118, June, 1968.

38. Chalmers, R. K., B.Sc., M. Chem. A., F.R.E.C. (Member), "Pretreatment of Toxic Wastes", Water Pollution Control Engineering, Vol. 69, 1970, pp. 281-291.

39. Chartrand, N., "New Sophisticated Production Techniques Improve Printed Circuit Quality, Reliability", Plating, pp. 736-740, August 1972.

40. "Cheminator", Chemical Engineering, McGraw Hill, New York, NY, September, 1975, p. 26.

41. Chian, Edward S. K., and Fang, Herbert H. P., "Evaluation of New Reverse Osmosis Membranes for the Separation of Toxic Compounds from Wastewater", Annual Summary Rept. No. 1, September 1971.

42. "Chromium Disposal", Two variations; Anon: Indus. Water Eng., June 1969.

43. Coggi, J. V., (McDonnell Douglas Astronautics Co., Huntington Beach, Calif.), and Glonts, S. E., (NASA Marshall Space Flight Center, Huntsville, Ala.), "G189A Analytical Simulation of the RITE Integrated Waste Management Water System", SAE, AIAA, ASME, and AICHE, Intersociety Conference on Environmental Systems, Seattle, Wash., July 29 - Aug. 1, 1974 ASME Paper 74-ENAs-8, pp. 10.

44. "Common and Precious Metals Development Document for Interim Final Effluent Limitations Guidelines and Proposed New Source Performance Standards", EPA-440/1-75/040 Group I , Phase II, Segment of the Electroplating.

45. Coombs, C. F., Jr., Printed Circuits Handbook, McGraw-Hill Book Company.

46. Coplen, T. B., and Hanshaw, B. B., "Ultrafiltration by a Compacted Clay Membrane-Oxygen and Hydrogen Isotopic Fractionation, II - Sodium Ion Exclusion at Various Ionic Strengths", Geochimica et Cosmochimica Acta., Vol. 37, October 1973, pp. 2295-2327.

47. "Copper, Nickel, Chromium, and Zinc Segment of Electroplating Development Document for Effluent Limitations Guidelines and New Source Performance Standards", EPA-440/174-003-a.

48. Culotta, J. M., and Swanton, W. F., "Controls for Plating Waste Recovery System", The Pfaudler Co., Rochester, N.Y., August 1971.

49. Culotta, J. M., and Swanton, W. F., "Recovery of Plating Wastes", Pfaudler Co., Div. of Sybron Corp., Rochester, N.Y., December 1970.

50. "Cyanide Wastes Might Be Destroyed at One-Tenth the Conventional Cost", Chemical Engineering, 79 (29), 20, December 25, 1972.

51. D'Arcy, George R., and Ross, J. Richard, "Ion Exchange Process", Department of the Interior, Washington, D.C., December 1968.

52. Dawson, M. H., and Wintersdorff, R., "Research and Development on the Vapor Gap Oamoric Distillation Process", Research and Development Progress Rept., Whittaker Corp., San Diego, Calif., September 1966.

53. "Destroy Free Cyanide in Compact, Continuous Unit", Calgon Corporation Advertisement, Finisher's Management, 19 (2), 14, February, 1973.

54. Detering, W. R., "Integral Plating Waste Treatment Facility", TRW Inc., Cleveland, Ohio, March 1970.

55. "Developments to Watch", Product Engineering, Morgan-Grampian, New York, NY, October 1976, p. 5.

56. DiBari, G.A., "Practical Nickel Plating", AES Illustrated Lecture Series, American Electroplaters Society, Inc., Winter Park, FL. 1973.

57. Donnelly, Richard G., "Reverse Osmosis Treatment of Electroplating Wastes", Abcor Inc. Cambridge, Mass., May 1974.

58. Douglas, A. S., Tagami, M., and Milstead, C. E., "Membrane Material for Waste Water Reclamation by Reverse Osmosis", Gulf Central Atomic, Inc., San Diego, Calif., June 1970.

59. Dow Chemical Company, Designed Products Dept., Midland, Michigan, "Keys to Chelation with Versene Chelating Agents".

60. Duva, R., "Gold Electroplating Part 1", AES Illustrated Lecture Series, American Electroplaters Society, Inc., Winter Park, FL. 1977.

61. Dvorin, R., "Dialysis for Solution Treatment in the Electroplating Industry", Electroplating, 57 (4), 52-54 +62, April, 1959.

62. Dwyer, F. P., and Mellor, D. P., Chelating Agents and Metal Chelates, Academic Press, N.Y.

63. "Economic Analysis of Proposed Pretreatment Standards for Existing Sources of the Electroplating Point Source Category", EPA-230/1-78-001, U.S. Environmental Protection Agency, Washington, D.C., December, 1977.

64. Elata, C., "The Determination of the Intrinsic Characteristics of Reverse Osmosis Membranes", Research and Development Progress Rept., Hydronautics, Inc., January 1968.

65. "Electrochemical Unit Treats Plating Wastes", II. Diags, Am. Mach. February 1970.

66. "Electrodialysis Speeds Up Waste Treatment", Environmental Science and Technology, 4 (3), 201, March, 1970. Science and Technology, 4 (3), 201, March, 1970.

67. Electroplating Engineering Handbook, Edited by A. K. Graham, 3rd Edition, Van Nostrand Rheinhold Company, New York, 1971.

68. "Electroplating - Fundamentals of Surface Finishing", Frederic A. Lowenheim, McGraw-Hill, Inc., New York, NY, 1978.

69. Electroplating Guidebook and Directory, Metals and Plastics Publications, Inc., 1972.

70. Electroplating Guidebook and Directory, Metals and Plastics Publications, Inc., 1973.

71. "Electrotechnology Volume 1, Wastewater Treatment and Separation Methods", Paul N. Cheremisinoff, John A. King, Robert P. Oullette, Ann Arbor Science Publishers, Inc., Ann Arbor, MI, 1978.

72. Ellington, R. C., Development of Water Purification Systems Based on Reverse Osmosis", Research and Development Progress Rept., Pratt and Whitney Aircraft, East Hartford, Conn., April 1969.

73. Elliott, L. C., Grana, C. V., and Dukler, A. E., "Experimental Program to Improve the VTE Distillation Process", Research and Development Progress Rept., Houston Research Inst., Inc., Tex., September 1969.

74. "Emerging Technologies for Treatment of Electroplating Wastewaters", for presentation by Stinson, M. K., at AICHE 71st Annual Meeting, session 69, Miami Beach, Florida, Nov. 15, 1978.

75. Emery, William T., "Control of Copper Electroplating Wastes. An Annotated Bibliography", Final Report: Vermont Univ., Burlington, Technical Information Center, June, 1972.

76. "Evaluation of the Vertical Tube Evaporator and the Multistage Flash Desalination Process", Research and Development Progress Rept., Los Angeles, Calif., August 1970.

77. "Feasibility of Treating Waste Water by Distillation", Water Pollution Control Research Series, Florida Univ., Gainseville, February 1971.

78. Feldstein, N., "Reliability in Printed Circuitry Metalization - A Case for Improved Catalyzing Systems", Plating, June 1973, pp. 611-616.

79. Feldstein, N., "Selective Electroless Plating Techniques: A Survey" Plating, August, 1970, pp. 803-806.

80. Feldstein, N., and Weiner, J. A., "Technique for Controlling Thio Compound Concentration in Electroless Plating Baths", Analytical Chem., Vol. 43, No. 8, July 1971.

81. Fishbein, Sallie A., "Effluent Control in Zinc Bonderizing Processes-1. The Recycle of Rinse Waters Via an Ion Exchanger Process", Plating, McGarvey, Frank X. Puricons, Inc., Berwyn, Pa; March 1975.

82. Fishbein, L., Chromatography of Environmental Hazards, Vol. I, Carcinogens, Mutagens and Teratogens.

83. Fluke, G. A., Wong, Chung-ming, Savage, W. F., and Channabasappa, K. C., "Development of Tubular Reverse Osmosis Module Assembly Techniques", Research and Development Progress Rept., Aero-jet-General Corp., El Monte, Calif., August 1970.

84. Fortwengler, H. P., Jr., Atkins, D. E., Poskitt, T. R., and Lunskis, B. J., "Permeability Calibration of Cellophane Tubing Under Conditions of Simple Dialysis and Ultrafiltration", Progress Report, Report No. USAMRL-1097, May 7, 1974, pp. 11.

85. Foulke, D. G., "Purification of Plating Solutions", Metal Finishing, June 1969. Finishing, June 1969.

86. Frey, S.S. and Swalheim, D.A., "Cleaning and Pickling for Electroplating", AES Illustrated Lecture Series, American Electroplaters Society, Inc., Winter Park, FL 1970.

87. Fries, William., "Removal of Cyanide From Industrial Waste Effluent With Ion Exchange Resins", Avery, Noyes L. Rohm and Haas Co., Philidelphia, Pa., September 1974.

88. Gavis, Jerome, "Wastewater Reuse", Final Rept., National Water Commission, Arlington, VA., July 1971.

89. Geisler, R. R., "Method of Making Printed Circuit Assemblies", Application Date February 7, 1968, Patented January 12, 1971, pp. 3, PAT-APPL-703730.

90. General Motors Research Laboratories, "Factors Influencing Plate Distribution", AES Illustrated Lecture Series, American electroplaters Society, Inc., Winter Park, FL 1975.

91. George, L. C., and Cochran, Andrew A., "Recovery of Metals From Electroplating Wastes By the Waste-Plus-Waste Method", Technical Progress Rept. No. 27, Bureau of Mines, Washington, D. C., August 1970.

92. Goldman, I. B., "A Photoimaging Process for Printed Circuit Manufacture", Plating, January 1974, pp. 47-52.

93. Golomg, A., "Application of Reverse Osmosis to Electroplating Waste Treatment", Ontario Res, Foundation Sheriden Park Ontario, October 1970.

94. Gouda, V. K., Shawki, S., and El-Tawil, H., "Electroless Nickel Deposition Mechanism of Hypophosphite Reduction", Metal Finishing, May 1972, pp. 77-81, 88.

95. Graham, A. K., Electroplating Engineering Handbook , Third Edition, Van Nostrand Rheinhold.

96. Grays, Harovel., and Walton, Harold F., "Ion Exchange Separation of Silver and Lead", Colorado Univ. Boulder, 1970.

97. Greene, P. A., Senatore, S. J., and Ebel, P. A., "Budgetary Capital Cost Estimates of 1 to 19-MGD Multistage Flash Distillation Plants for Desalting Seawater", Oak Ridge National Lab. Tenn., August 1970.

98. Groshart, E., "Metalizing Nonconductors - Electroless Copper", Metal Finishing, May 1972, pp. 41-43, 53.

99. Groshart, E., "Metalizing Nonconductors - II. Plateable Plastics", Metal Finishing, February 1972, pp. 85-90.

100. Groshart, E., "Metalizing Nonconductors - III Preparation for Metalizing", Metal Finishing, March 1972, pp. 46-49.

101. Groshart, E. "Metalizing Nonconductors - IV Electroless Nickel", Metal Finishing, March 1972, pp. 35-40.

102. Guter, G. A., and Bishop, H. K., "Investigation of Inorganic Ion-Exchange Membranes for Electrodialysis Applications", Research and Development Progress Rept. Douglas Aircraft Co., Inc., Newport Beach, Calif., November 1967.

103. Gutzeit, G., Catalytic Chemical Methods, Second Edition, Rheinhold Publishing Corp., New York.

104. Hajdu, Dr. Juan, "Electroless Plating Baths", Metal Finishing Guidebook and Directory, 1975, pp. 450-457.

105. Halva, C.J. and Rothschild, B.F., "Plating and Finishing of Printed Wiring/Circuit Boards", AES Illustrated Lecture Series, American Electroplaters Society, Inc., Winter Park, FL 1976.

106. Hamer, E. A. G., and Kalish R. L., "Reverse Osmosis Membrane Regeneration", Research and Development Progress Rept., American Standard, New Brunswick, N.J., September 1969.

107. Hammond, R. P., Alexander, L. G., and Hoffman, H. W., "Performance Characteristics of Advanced Evaporator Tubes for Longtube Vertical Evaporators (An Addendum)", Research and Development Progress Rept., Oak Ridge National Lab, Tenn., March 1971.

108. "Handbook of Environmental Data on Organic Chemicals", Karel Verschueren, Van Nostrand Reinhold Company, New York, NY, 1977.

109. Harris, F. L., Humphreys, G. B., Isakari, H., and Reynolds, G., "Engineering and Economic Evaluation Study of Reverse Osmosis", Research and Development Progress Rept., Kaiser Engineers, Oakland, Calif., December 1969.

110. Hise, E. C., and Thompson, S. A., "Conceptual Design Study of a 250-Million Gallon Per Day Combined Vertical Tube-Flash Evaporator Desalination Plant", Research and Development Progress Rept., Oak Ridge National Lab., Tenn., August 1968.

111. Honegger, R. J., Remus, G. A., and Kurg, E. K., "Vacuum Distillation: Vapor Filtered Catalytic Oxidation Water Reclamation System Utilizing Radioisotopes", Final Report General American Transportation Corp., Niles, Ill., Research Div., November 1971.

112. Honegger, R. J., Remus, G. A., and Krug, E. K., "Vacuum Distillation Vapor Filtration Water Recovery, Phases 1 and 2 Interim Report", July 1973, pp. 40; General American Transportation Corp., Niles Ill., Research Div., HASA-CR-124397.

113. Honegger, R. J., Neveril, R. B., and Remus, G. A., "Vacuum Distillation Vapor Filtration Water Recovery Summary Report

for Phase 3", April 1974, pp. 40; General American Transportation Corp., Niles Ill., Research Div., NASA-CR-120303.

114. Hopfenberg, H. S., "Water Treatment by Membrane Ultrafiltration", North Carolina State Univ., Raleigh, May 1973.

115. Hubbell, F.N., "Chemically Deposited Composites - A New Generation of Electroless Coatings", Plating and Surface Finishing, American Electroplaters Society, E. Orange, NJ, Vol. 65, Dec. 1978, p. 48.

116. Huffman, Everett L., "Development of Transport Depletion Processes", Research and Development Progress Rept., Southern Research and Development Progress Rept., Southern Research Inst., Birmingham, Ala., April 1969.

117. "In Process Pollution Abatement - Upgrading Metal Finishing Facilities to Reduce Pollution", EPA Technology Transfer Seminar Publication, Environmental Protection Agency, July, 1973.

118. "Ion Transfer Method Developed for Metal Plating", Industrial Finishing, Hitchcock Publishing Co., Wheaton, Ohio, April, 1975, p. 95.

119. Jawitz, M. W., "Evaluation of Copper Plating for Printed Circuit Boards", Metal Finishing, July 1973, pp. 31-34.

120. Johnson, Robert L., and Baumann, Robert E., "PAB Process for Advanced Water Treatment", Completion Rept., Iowa State Univ., Ames, Engineering Research Inst., December 1970.

121. Johnson, James S., Jr., Kraus, K. A., Wong, Chung-ming, Sherman, W., and Podall, H. E., "Separations Processes", Research and Development Progress Rept., Oak Ridge National Lab., Tenn., February 1970.

122. Kennard, William C., and Williams, M. S., "Water Research at the University of Connecticut", Connecticut Univ., Storrs Inst. of Water Resources, July 1972.

123. Kennedy, B. W. Polyamide Resin-Fiberglass Cloth Laminates for Printed Circuit Boards, Application date September 1970, US-Patent-Appl-SN71048.

124. Kepinski, Joseph., and Chlubek, Mikodem., "Application of Filtration Through Semi-Permeable Membranes For Treatment of

Wastes", Army Foreign Science and Technology Center Charlottesville, Va., May 1974.

125. Kingzett's Chemical Encyclopedia, Ninth Edition, Van Nostrand Co., Princeton, N.J., pp. 164.

126. Kirk, R. E. Encyclopedia of Chemical Technology, 1960.

127. Kremen, S. S., and Reidinger, A. B., "Reverse Osmosis Membrane Module (Spiral-Wound) (Concept)", Research and Development Progress Rept., Gulf Energy and Environmental Systems, Inc., San Diego, Calif., April 1971.

128. Kunkel, R., and Manahan, E., "Atomic Absorption Analysis of Strong Heavy Metal Chelating Agents in Water and Waste Water", Analytical Chemistry, Vol. 45, No. 8, July 1973.

129. Lacy, William J., "Projects of The Industrial Pollution Control Branch", Federal Water Pollution Control Administration, Washington, D. C., August 1969.

130. Lainer, V.I., "Modern Electroplating", Moscow, 1969.

131. Lampe, B. T., Evans, M. E., Long, C. L., and Snelt, R. B., Solder Splatter CAused by Outgassing Holes in Printed Wiring Boards", May 1971, pp. 38, Bendix Corp., Kansas City, No., BDX-613-505.

132. Lancy, L.E., "Metal Finishing Waste Treatment Aims Accomplished by Process Changes", Chemical Engineering Progress Symposium Series, Vol. 67, 1971, pp. 439-441.

133. Lancy, L.E., and Steward, F.A., "Disposal of Metal Finishing Sludges - The Segregated Landfill Concept", Plating and Surface Finishing, American Electroplaters Society, E. Orange, NJ, Vol. 65, Dec., 1978, p. 14.

134. Lansdale, H. K., Milstead, C. E., Cross, B. P., and Braber, F.M., "Study of Rejection of Various Solutes by Reverse Osmosis Membranes", Reserach and Development Progress Rept., Gulf General Atomic Inc., San Diego, Calif., July 1969.

135. Larson, T. J., and Gibbons, B. C., "Reverse Osmosis Membrane Module (Spiral-Wound Concept) ", Research and Development Progress Rept., Gulf General Atomic Inc., San Diego, Calif., June 1969.

136. Lawes, B.C. and Stevens, W.F., "Treatment of Cyanide and Chromate Rinses", AES Illustrated Lecture Series, American Electroplaters Society, Inc., Winter Park, FL. 1972.

137. Lee, E. S., and Lee, P., "Nonlinear Boundary Value Problems and Multicomponent Distillation", Technical Report, June 1973, pp. 24, USC-113P-57, RB73-24, University of Southern California, Los Angeles, Dept. of Electrical Engineering.

138. Lefevre, L. J., "How to Ion Exchange Efficiently", Prod. Finish, Cincinnati, December 1971.

139. Lehmann, Richard B., "Treatment of Electroplating Wastes by Ion Exchange", Technical Report, October 1971-October 1972.

140. Light, T. S., "Ion Selective Electrodes Industrial Applications", Indus. Water Eng., Vol. 6, No. 9, September 1969, pp. 33-37.

141. Logozzo, Arthur W., "Hard Chromium Plating", AES Illustrated Lecture Series, American Electroplaters Society, Inc., Winter Park, FL. 1973.

142. Lordi, G., (Digital Equipment Corp., Maynard Mass.), Greenberg, L.A., (Baker Bros., Stoughton, Mass), Shorr, J., (Baker Bros.), Stoughton, Mass.), "Modified Chemical Treatment Systems for Complexed Wastes", pp. 137, 138.

143. Lowder, L.R., "Modifications Improve Treatment of Plating Room Wastes", Water and Sewage Works, Plenum Publishing Corp., New York, NY, December, 1968, p. 581.

144. Lower, W. A., Eckefeldt, E., "Sodium Ion Monitoring", Indus. Water Eng., Vol. 6, No. 3, March 1969, pp. 27-29.

145. M&T Chemicals Inc., "Decorative Chromium Plating", AES Illustrated Lecture Series, American Electroplaters Society, Inc., Winter Park, FL. 1972.

146. MacDermid, Inc., "Chromate Conversion Coatings", AES Illustrated Lecture Series, American Electroplaters Society, Inc., Winter Park, FL. 1970.

147. Machinery and Mechanical Products Manufacturing, Hamilton Standard, "Draft Development Document for Effluent Limitations Guidelines and Standards of Performance, Volumes 1. 2. 3, and 4".

148. Manahan, E., Smith, M. J., Jones, D., Harlan, S., and Kunkel, R., "An Analytical Method for Total Heavy Metal Complexing Agents in Water and its Application to Water Quality Studies", Completion Rept., July 1972-June 1973. August 27, 1973, pp. 16, Missouri Water Resources Research Center Columbia W74 02658.

149. Mansen, R. A., and Dytrt, F., Method of Electroless Nickel Plating and Plating Baths Therefore., Application date May 13, 1966, PAT-APPL-551-185.

150. Martell, A. E., "Chelation and Olation Reactions of Metal Ions in Aqueous Solution", June 15, 1973, Contract AT (40-1) - 3621, pp. 7.

151. Martell, A. E., Chemistry of Metal Chelate Compounds, Prentice Hall, N.Y., 1952.

152. Mazzeo, D.A., "Energy Conservation In Plating and Surface Finishing", Plating and Surface Finishing, American Electroplaters Society, Inc., Winter Park, FL., July, 1979, pp. 10-12.

153. McDermott, J., Plating of Plastics With Metals , Noyes Data Corporation, 1974.

154. McDermott, G. N., Moore, W. A., Post, M. A., and Ettinger, M. B., "Effects of Copper on Aerobic Biological Sewage Treatment", THIS Journal, Vol. 35, No. 2, February 1963, pp. 227.

155. McDonough, W. P., "Use of the Integrated Waste Treatment Approach in the Large Electroplating Shop", S. K. Williams Co., Wauwatosa, Wis., 1971.

156. McGarr, H. J., and others, "Cost of Copper: Solvent Extraction and Electrowinning Look Great on Paper", Eng & Min., December 1969.

157. McNutt, J.E., and Swalheim, D.A., "Recovery and Re-use of Chemicals in Plating Effluents", AES Illustrated Lecture Series, American Electroplaters Society, Inc., Winter Park, FL. 1975.

158. McRae, W. A., "Potable Water From Seawater By High Temperature Electrodialysis", AEC Abundant Nucl. Energy, Ionics, Inc., Watertown, Mass., May 1969.

159. Metal Finishing Segment of Electroplating Development Document for Interim Final Effluent Limitations Guidelines and Proposed New Source Performance Standards", EPA-440/1-75/040-a Group I, Phase II.

160. Metal Finishing, "Recycling Etchant for Printed Circuits", March 1972, pp. 42-43.

161. Metals Handbook, American Society for Metals, 8th Ed. 1964.

162. Metzger, C. A., Herald, A. B., McMullen, B., and Schelle, M. W., "Vacuum Distillation/Vapor Filtered Catalytic Oxidation for Water Reclamation Using Radioisotopes for Thermal Energy", Aerospace Medicine, Vol. 41, No. 8, August 1970, pp. 909-914.

163. Michaels, A. S., Bixler, H. J., Cross, R. A., Cleveland, D. S., and Carroll, B., "Development of a Disposable Membrane Cartridge for Reverse Osmosis Desalination:, Research and Development Progress Rept., Amicon Corp., Lexington, Mass, May 1972.

164. Mills, A. B., "Reverse Osmosis for Purification of Water", Solid State Technol, Fairchild Semiconductor, Palo Alto, Calif., August 1970.

165. Missel, L. "Gold Plating of PC Boards and Wire", Metal Finishing, February 1975, pp. 69-73.

166. Modern Electroplating, Edited by F. A. Lowenheim, 2nd Ed., John Wiley and Sons, 1963.

167. Mohler, J. B., "Chromic-Sulfuric Etchants for Printed Circuit Boards", Metal Finishing, August, 1972, pp. 49, 50, 55.

168. Mohler, J.B., "The Art and Science of Rinsing", AES Illustrated Lecture Series, American Electroplating Society, Inc., Winter Park, FL. 1973.

169. Montgomery, D.C., "The Coloration of Anodic Coatings for Architectural Applications by Using Organic Dyes:, Plating and Surface Finishing, American Electroplaters Society, E. Orange, NJ, Vol. 65, Dec. 78, p. 48.

170. Moore, W. A., McDermott, G. N., Post, M. A., Mandia, J. W., and Ettinger, M. B., "Effects of Chromium on the Activated Sludge Process", THIS Journal, Vol. 33, No. 1, January 1961, pp. 54.

171. Morris, D. P., "Effect of Chelation on Toxicity of Copper", Marine Pollution Bulletin, Vol. 4, No. 10, October 1973, pp. 159-160.

172. Murski, K., "Practical Electroless Nickel Plating", Metal Finishing, December 1970, pp. 36-40.

173. Mytelka, A. I., et al., "Heavy Metals in Wastewater and Treatment Plant Effluent", Jour. Water Poll. Control Fed., Vol. 45, 1973, pp. 859.

174. Nelson, C. A., Yannitell, T. W., and Rudnick, S. J., "Training Manual for Fabrication of Printed Circuit Boards", July 1970, pp. 28, Argonne National Lab., Illinois, ANL 7725.

175. "New Technology for Treatment of Waster Water By Reverse Osmosis", Envirogenics Co., El Monte, Calif, September 1970.

176. Novotny, C. J., "Water Use and Recovery", Finisher's Ma. 18 (2), 43-46, +50, February 1973.

177. Nusbaum, I., Sliegh, J. H., Jr., and Kremen, S.SS., "Study and Experiments in Waste Water Reclamation by Reverse Osmosis", Water Pollution Control Research Series, Gulf General Atomic, Inc., San Diego, Calif., May 1970.

178. O'Dell, C. G., "Recirculatory Systems for Electroplating", Eng. Prod. December 1970. Eng. Prod. December 1970.

179. Ogburn, R., and Johnson, C. E., "Banded Structures of Electroless Nickel", Plating Technical Brief, October 1973, pp. 1043-1044.

180. Ogburn, F., and Johnson, C. E., "Effects of Electroless Nickel Process Variables on Quality Requirements:, Report No. NBSIR-73-24 RIA-R-RR-T-6-75-73, October 1973, pp. 40.

181. Oh, C. B., and Hartley, H. S., "Recycling Plating Wastes by Vapor Recompression", Products Finishing 36 (8), 90-96, May 1972.

182. Oliver, G. D., (inventor to NASA), Scanning Nozzle Plating System, Application date June 28, 1972, SN-266913.

183. "Operation of the Multi-Stage Flash Distillation Plant, San Diego, Calif.", Semi-annual Rept. No. 3, Catalytic Construction Co., Philadelphia, Pa., July 1970-December 1970.

184. "Operation of the Multi-Effect Multi-Stage Flash Distillation Plant (Clair Engle), San Diego, Calif", Annual Rept, No. 2, Catalytic Construction Co. Philadelphia, Pa., June 1963-May 1969.

185. Ostraw, R. and Kessler, R.B., "A Technical and Economic Comparison of Cyanide and Cyanide-Free Zinc Plating", Plating, American Electroplaters Society, Hackensack, NJ, NJ, April, 1970.

186. Othmer, K., Complexing Agents Energy of Chemical Technology, Published by Interscience.

187. "Overflow", Chemical Week, 111 (24), 47, December 1972.

188. Oyler, R. W. Disposal of Waste Cyanides by Electrolytic Oxidation", Plating, 36, (4), 341-342, April 1949.

189. Parent, R. G., and Arnold, J.W., "Field Test Evaluation of the High Temperature Electrodialysis Process At Webster South Dakota", Research and Development Progress Rept., Ionics, Inc., Watertown, Mass., January 1974.

190. Parthasaradhy, N. V., "Survey of Methods for Treatment of Effluents in Electroplating Industry", Environ. Health, October 1969.

191. Pearlstein, F., and Weightman, R. F., "Electroless Copper Plating Using Dimethylamine Borane", Plating, May 1973, pp. 474-476.

192. Pearlstein, F., and Weightman, R. F., "Electroless Palladium Deposition", Report No. FA-A69-10, 1969.

193. Pearlstein, F., "Selection and Application of Inorganic Finishers - Part 1", Plating and Surface Finishing, American Electroplaters Society, E. Orange, NJ, Vol. 65, Dec. 1978, p. 32.

194. Pearlstein, F. et al, "Testing and Evaluation of Deposits", AES Illustrated Lecture Series, American Electroplaters Society, Inc., Winter Park, FL. 1974.

195. PF Staff Report, "Developments in Additive Circuits", Products Finishing, February 1975, pp. 74-78.

196. Phasey, N. W., "Experiences With Ion Exchange Resins for Effluent Treatment", Prod. Finish (Lond.), Oxford, Engl. British Leyland (Austin Morris) Ltd., November 1972.

197. "Physicochemical Processes for Water Quality Control", Wiley-Interscience Series, Walter J. Weber, Jr., John Wiley and Sons Inc., New York, NY, 1972.

198. Treatment Facilities, Training Manual", Environmental Protection Agency, Washington, D.C., Office of Water Programs, July 1971.

199. Plummer, C. W., Enos, J., LaConti, A. B., and Boyack, J. R., "Evaluation of Newly Developed Ion-Exchange Membranes for Electrodialysis and/or Transport Depletion", Research and Development Progress Rept., General Electric Co., Lynn, Mass., December 1969.

200. Podobaev, N. I., "Electrolysis", Report No. ESTC-HT-23201l-72, April 23, 1974, pp. 19, Trans. of Khimiya V Shkole (USSR) n3, pp. 7-18, 1971.

201. "Pollution Control 1978", Products Finishing, Gardner Publications Inc., Cincinnati, Ohio, August, 1978, pp. 39-41.

202. Porter, J. Winston., and Cherney, Sl. "An Economic and Engineering Analysis of the Electrodialysis Process", Research and Development Progress Rept., Bechtel Corp., San Francisco, Calif., August 1969.

203. Pourbais, Marcel, "Atlas of Electrochemical Equilibria in Aqueous Solutions, Perfamon Press, New York, 1966.

204. Pressman, Marice., "Prototype Reverse Osmosis Wastewater Purification Unit", Final Rept., Army Mobility Equipment Research and Development Center Fort Belvoir Va., September 1973.

205. Price, W. L., "Plated Polypropylene", Plating, February 1971, pp. 111-114.

206. Rajagopal, I., and Rajam, K.S., "A New Addition Agent for Lead Plating", Metal Finishing, Metals and Plastics Publication Inc., Hackensack, NJ, December, 1978.

207. Rajan, S., "Application of Inorganic Ion-Exchange Membranes to Electrodialysis", Research and Development Progress Rept., LTT Research Inst., Chicago, Ill., November 1966.

208. Rauch, F. C., and Luciw, F. W., "Passivation of Metal Aircraft Surfaces ", Final Rept., January 1 - June 30, 1970, American Cyanamid Co., Stamford, Conn., Central Research Div., July 1970, pp. 27.

209. Read, H.J., "Principles of Corrosion", AES Illustrated Lecture Series, American Electroplaters Society, Inc., Winter Park, FL, 1971.

210. "Recycling Etchant for Printed Circuits", Metal Finishing, Metals and Plastics Publications Inc., Hackensack, NJ, March 1972, pp. 42-43.

211. Reid, G. W., et al., "Effects of Metallic Ions on Biological Waste Treatment Processes", Water & Sew. Works, Vol. 115, No. 7, 1968, pp. 320.

212. "Reverse Osmosis and Electroplating", Anon., Ind Finish, July 1974.

213. Rich. T. R., and Mix, T. W., "Development of an Improved Membrane for a Vapor Diffusion Water Recovery Process Final Report", August 1974, pp. 80.

214. Richardson, J. L., Segovin, G., Mason, J. W., and Subcasky, W. J., "Advanced Reverse Osmosis-Membrane Module Systems", Research and Development Progress Rept., Philco-Ford Corp., Newport Beach, Calif., Aeronautics Dib., May 1971.

215. Rigling, W. S., "Multilayer Printed Wiring Board Design Standards", Final Report, October 2 - December 5, 1970, Report No. OR-11035, August 1971, pp. 32.

216. Robinson, G.T., "Powder Coating Replaces Zinc Plating for Pulleys", Products Finishing, Gardner Publications Inc., Cincinnati, Ohio, Feb. 1974, pp. 79-81.

217. Robinson, L. C. R., "Printed Circuit Manufacturing", SM/TN/B/1585, British Steel Corp., Sheffield, (England) Information Services, October 1973, pp. 6.

218. Rodzewich, Edward A., "Theory and Practice of Phosphating", AES Illustrated Lecture Series, American Electroplaters Society, Inc., Winter Park, FL. 1974.

219. Rozell, Lee T., "Ultrathin Membranes for Treating Metal Finishing Effluents by Reverse Osmosis", North Star Research and Development Inst., Minneapolis, Minn., November 1971.

220. Rozelle, L. T., Kopp, C. V. Jr., Cadotte, J. E., and Cobian, K. E., "SN-100 Membranes for Reverse Osmosis Applications", North Star Institute, Minneapolis, Minn., July - August 1974.

221. Rozelle, L. T., Cadotte, J. E., Nelson, B. R., and Kopp, C. V., "Ultrathin Membranes for Treatment of Waste Effluent by Reverse Osmosis", North Star Research and Development Institute, Minneapolis, Minn., 1973.

222. Sachs, T.R., "Diversified Finisher Handles Complex Waste Treatment Problem" Plating and Surface Finishing, American Electroplaters Society, E. Orange, NJ, Vol. 65, Dec. 1978, p. 36.

223. Salyer, L. O., Kirkland, E. V., and Eilken, P. H., "Improved Avionic Membranes for Electrodialysis", Research and Development Progress Rept., Monsanto Research Corp , Dayton, Ohio, December 1968.

224. "Semiconductor Technique Now to Plate Auto Parts", Machine Design, Penton Publishing, Cleveland, Ohio, p. 18.

225. Sephton, Hugo H., "An Investigation of Vertical Tube Evaporation Utilizing the Septhon Flash Tube", Research and Development Progress Rept., California Univ. Berkeley, Sea Water Conversion Lab, June 1968.

226. Silman, H., "Treatment of Rinse Water from Electrochemical Processes", Efco Ltd., Surray, England, June 1971.

227. Sinclair, R. G., Biological Abstracts, Inc., Battelle, Columbus, Ohio, 1974.

228. Smookler, S., and Cannizzaro, J., "The Status of Additive Circuits Today", Photocircuits Division of Kollmorgen Corporation, No. 21/1.

229. Smolyakov, V., Water Filtration Purification and Distillation (Opresenitelnaya Ustanovka), October 1967, pp. 8 Contracts DA-44-009-AMC 1563 (T) n 6, pp. 34-56, 1965, Distribution Limitation now removed.

230. Sondak, N. E., and Dodge, B. F., "The Oxidation of Cyanide Bearing Plating Wastes by Ozone. Part I", Plating, 48 (2) 173-180, February, 1961.

231. Sondak, N. E., and Dodge, B. F., "The Oxidation of Cyanide Bearing Plating Wastes by Ozone. Part II", Plating: 48 (3), 280-28196, March.

232. Snoevink, Vernon, L., Kin, Cyung R., Hinrichs, Richard 1., and Jennings, Paul A., "Synthetic Resins and Activated Carbon

for Waste Water Treatment", Final Rept., Illinois University Urbana, June 1974.

233. Sorber, C. A., Malina, J. F., Jr., and Sagik, B. P., "Virus Rejection by the Reverse Osmosis Ultrafiltration Processes", Report Nos. CRWR-82, EHE-71-9, 1971, pp. 100.

234. Spatz, D. D., "Industrial Waste Processing With Reverse Osmosis", Osmonics, Inc., Hopkins, Minnesota, August 1, 1971.

235. Spatz, D. D., "Electroplating Waste Water Processing With Reverse Osmosis", Products Finishing, 36 (11), 79-89, August, 1972.

236. Spencer, L. F., "Electroless Nickel Plating - A Review", Metal Finishing, 4 parts, October 1974, pp. 35-45; November 1974, pp. 50-54, December 1974, pp. 58-64; January 1975, pp. 38-44.

237. Spooner, R.C., "Sulfuric Acid Anodizing of Aluminum and Its Alloys", AES Illustrated Lecture Series, American Electroplaters Society, Inc., Winter Park, FL. 1969.

238. Staebler, C.J. and Simpers, B.F., "Corrosion Resistant Coatings with Low Water Pollution Potential", Presented at the EPA/ AES First Annual Conference on Advanced Pollution Control for the Metal Finishing Industry, Lake Buena Vista, Florida, January 17-19, 1978.

239. Stannett, T., and Hopgenberg, H. B., "Research on Advanced Membranes for Reverse Osmosis", Research and Development Progress Rept., March 1974.

240. Strickland, G. R., "Electroplating Techniques and Equipment in Printed Circuit Manufacture", Electroplating and Metal Finishing, July 1971.

241. "Studies on the Toxicity of Heavy Metals to Aquatic Animals and the Factors to Decrease the Toxicity", Bulletin of Total Regional Fisheries Research Laboratory, No. 58., May 1969, pp. 233-241, 255-264.

242. Sussman, Donald L., "Chemical and Physical Factors in the Flocculation of Metal Plating Wastes with Polyelectrolytes", Completion Report, Rhode Island Univ., Kingston, Water Resources Center, June 1972.

243. Sussman, Donald L., "Flocculation of Chrome Plating Wastes with Polyelectrolytes", Plenum Press (Polym Sci. and Technol. V2), New York, August 1972.

244. Swalheim, D.A. et al, "Cyanide Copper Plating", AES Illustrated Lecture Series, American Electroplaters Society, Inc., Winter Park, FL. 1969.

245. Swalheim, D.A. et al, "Zinc and Cadmium Plating", AES Illustrated Lecture Series, American Electroplaters Society, Inc., Winter Park, FL.

246. Takano, O., and Ono, K., "Acoustic Emission During Electro and Electroless Plating", Report No. UCLA Eng 7473, July 1974, pp. 23, California University Los Angeles School of Engineering and Applied Science.

247. "The Condensed Chemical Dictionary", Ninth Edition, revised by Gessner G. Hawley, Van Nostrand Reinhold Company, New York, NY, 1977.

248. "The Electrochemical Removal of Trace Metals for Metal Wastes with Simultaneous Cyanide Destruction", for presentation by H.S.A. Reactors Limited at the First Annual EPA/AES Conference on Advanced Pollution Control for the Metal Finishing Industry, Dutch Inn, Lake Buena Vista, Florida, Jan. 18, 1978.

249. Titus, Joan, B., "Reverse Osmosis Bibliography: Abstract and Indexed", Bibliography, Plastics Technical Evaluation Center Dover, N.J., June 1973.

250. Toledo, E., and Sprague, D. R., "Nickel Plating of Copper Printed Circuit Board", Report Nos. PAT-APPL-130029, Files March 31, 1971, patened May 9, 1972, pp. 6, U. S. patent 3,661,728.

251. Udylite Corporation, "Bright Acid Sulfate Copper Plating", AES Illustrated Lecture Series, American Electroplaters Society, Inc., Winter Park, FL. 1970.

252. Ushakov, N. N., "Multilayered Printed-Circuit Assembly", Report No. FTD-HT-23-250-72, Edited trans. of Entsiklopediya Izmerenii, Kontrolya i Avtomatizatsii (USSR) n 14, pp. 11-14 1970 by Henry Peck, Foreign Technology Div., Wright - Patterson AFB, Ohio.

253. Viklung, H. I., and Jha, A. D., "High Temperature Electrodialysis Phase V", Research and Development Progress

Rept., Ionics, Inc. Watertown, Mass., F. B. Letiz, Accomazzo, M. A., June 1974.

254. "Waste Treatment: Upgrading Metal Finishing Facilities to Reduce Pollution", Report on Technology Transfer Program, Environmental Protection Agency, Washington, D.C., July 1973.

255. "Wastewater Reclamation", Sub-Council Rept. National Industrial Pollution Control Council, Washington, D.C., March 1971.

256. "Waste Water Treatment and Reuse in a Metal Finishing Shop", Environmental Protection Technology Series, Williams (S.K.) Co., Wauwatosa, Wis., July 1974.

257. "Water Purification and Decontamination", Report Bibliography, Defense Documentation Center Alexandria, Va., June 1971.

258. "Water Quality Criteria 1972", National Academy of Sciences and National Academy of Engineering for the Environmental Protection Agency, Washington D.C. 1972 (U.S. Government Printing Office Stock No. 5501500520).

259. "Water Reuse", Office of Water Research and Technology, Washington, D.C., Water Resources Scientific Information Center, March 1975.

260. Water Reuse and Technology", Office of Water Research and Technology, Washington, D.C., Water Resources Scientific Information Center, March 1975.

261. Watson, M. R.,. "Pollution Control in Metal Finishing", Noyes Data Corp. Park Ridge, New Jersey.

262. Werbicki, J. J., Jr., "Practical Electroless and Immersion Plating", Plating, Vol. 58, No. 8.

263. "Where to Buy Electroplating Services", Modern Metals, 28 (6), P. 71, July 1972.

264. Wilson, G. C., "The Use of Tin When Alloyed With Nickel or Lead as a Printed Circuit Finish", Electroplating & Metal Finishing, December 1970, pp. 15-25.

265. Wilson, J. V., "Systems Analysis of Distillation Processes", Interim Report: Oak Ridge National Lab., Tenn., July 1971.

266. Winget, Oscar J., and Lindstrom Ronald E., "Separation of Rare Earth Elements by Ion Exchange", Department of the Interior, Washington, D.C., April 1969.

267. Wirth L., Jr., "Trouble with Layered Beds", Combustion, September 1969.

268. "Wooing Detroit with Cheaper Plated Plastic", Business Week, McGraw-Hill Inc., New York City, NY, May 9, 1977, pp. 44c-44d.

269. Wu, yung-Chi, and Hamer, Walter J., "Osmotic Coefficient and Mean - Activity Coefficients of a Series of Univalent Electrolytes in Aqueous Solutions At 25 Deg. C Part 13: Electrochemical Data", National Bureau of Standards, Washington D.C., February 1969.

270. Yasuda, H., and Lamaze, C. E., "Improved Membranes for Reverse Osmosis", Research and Development Progress Rept., Research Triangle Inst., Research Triangle Park, N.C., September 1969.

271. "Zinc Platers Assess Ways to Ease Effluent Problem", Metal Proq., June 1969. Proq., June 1969.

272. Zlatkis, A., Burening, W., and Bayer, E., "Determination of Gold in Natural Waters at the Parts per Billion Level by Chelation and Atomic Absorption Spectrometry", Analytical Chemistry, Vol, 41, No. 12, October 1969, pp. 1692-1695.

SECTION XV

GLOSSARY

Abrasive Blasting

(Surface treatment and cleaning.) Using dry or wet abrasive particles under air pressure for short durations of time to clean a metal surface.

Acceleration

See Activation.

Acetic Acid

(Ethanoic acid, vinegar acid, methanecarboxylic acid) CH_3COOH. Glacial acetic acid is the pure compound (99.8% min.), as distinguished from the usual water solutions known as acetic acid. Vinegar is a dilute acetic acid.

Acid Dip

Using any acid for the purpose of cleaning any material. Some methods of acid cleaning are pickling and oxidizing.

Acid Dip

An acidic solution for activating the workpiece surface prior to electroplating in an acidic solution, especially after the workpiece has been processed in an alkaline solution.

Acidity

The quantitative capacity of aqueous solutions to react with hydroxyl ions. It is measured by titration with a standard solution of a base to a specified end point. Usually expressed as milligrams per liter of calcium carbonate.

Act

The Federal Water Pollution Control Act Amendments of 1972.

Activitated Sludge Process

Removes organic matter from sewage by saturating it with air and biological active sludge.

Activation

The process of treating a substance by heat, radiation or the presence of another substance so that the first mentioned substance will undergo chemical or physical change more rapidly or completely.

Additive Circuitry

1. Full - Circuitry produced by the buildup of an electroless copper pattern upon an unclad board.

2. Semi - Circuitry produced by the selective "quick" etch of an electroless layer; this copper layer was previously deposited on an unclad board.

Administrator

Means the Administrator of the United States Environmental Protection Agency.

Adsorption

The adhesion in an extremely thin layer of molecules (as of gases, solids or liquids) to the surface of solid bodies or liquids with which they are in contact.

Aerobic

Living, active, or occurring only in the presence of oxygen.

Aerobic Biological Oxidation

Any waste treatment process utilizing organisms in the presence of air or oxygen to reduce the pollution load or oxygen demand of organic substances in water.

Agitation of Parts

The irregular movement given to parts when they have been submerged in a plating or rinse solution.

Air Agitation

The agitation of a liquid medium through the use of air pressure injected into the liquid.

Air Flotation

See Flotation

Air-Liquid Interface

The boundary layer between the air and the liquid in which mass transfer is diffusion controlled.

Aldehydes Group

A group of various highly reactive compounds typified by acetaldehyde and characterized by the group CHO.

Alkaline Cleaning

A process for cleaning steel where mineral and animal fats and oils must be removed from the surface. Solutions at high temperatures containing caustic soda, soda ash, alkaline silicates and alkaline phosphates are commonly used.

Alkalinity

The capacity of water to neutralize acids, a property imparted by the water's content of carbonates, bicarbonates, hydroxides, and occasionally borates, silicates, and phosphates.

Amines

A class of organic compounds of nitrogen that may be considered as derived from ammonia (NH_3) by replacing one or more of the hydrogen atoms by organic radicals, such as CH_3 or C_6H_5, as in methylamine and aniline. The former is a gas at ordinary temperature and pressure, but other amines are liquids or solids. All amines are basic in nature and usually combine readily with hydrochloric or other strong acids to form salts.

Anaerobic Biological Treatment

Any waste treatment process utilizing anaerobic or facultative organisms in the absence of air to reduce the organic matter in water.

Anaerobic Digestion

The process of allowing sludges to decompose naturally in heated tanks without a supply of oxygen.

Anaerobic Waste Treatment

(Sludge Processing) Waste stabilization brought about through the action of microorganisms in the absence of air or elemental oxygen.

Anions

The negatively charged ions in solution, e.g., hydroxyl.

Anode

The positively charged electrode in an electrochemical process.

Anodizing

The production of a protective oxide film on aluminum or other light metal by passing a high voltage electric current through a bath in which the metal is suspended.

Annual Capital Recovery Cost

Allocates the initial investment and the interest to the total operating cost. The capital recovery cost is equal to the initial investment multiplied by the capital recovery factor.

Aquifer

Water bearing stratum.

Atmospheric Evaporation

Evaporation utilizing a tower filled with packing material. Air is drawn in from the bottom of the tower and evaporates feed material entering from the top. There is no recovery of the vapors.

Atomic Absorption

Quantitative chemical instrumentation used for the analysis of elemental constituents.

Automatic Plating

1. Full - Plating in which the workpieces are automatically conveyed through successive cleaning and plating tanks.

2. Semi - Plating in which the workpieces are conveyed automatically through only one plating tank.

Barrel Finishing

Improving the surface finish of metal objects or parts by processing them in rotating equipment along with abrasive particles which may be suspended in a liquid.

Barrel Plating

Electroplating of workpieces in barrels (bulk).

Basis Metal or Material

That substance of which the workpieces are made and that receives the electroplate and the treatments in preparation for plating.

Batch Treatment

A waste treatment method where wastewater is collected over a period of time and then treated prior to discharge.

Best Available Technology Economically Available (BAT)

Level of technology applicable to effluent limitations to be achieved by July 1, 1983 for industrial discharges to surface waters as defined by Section 301(b) (2) (A) of the Act.

Level of technology applicable to effluent limitations to be achieved by July 1, 1977 for industrial discharages to surface waters as defined by Section 301 (b) (1) (A) of the Act.

Bidentate

Pertaining to structure, having member connections in two positions.

Biodegradability

The susceptibility of a substance to decomposition by microorganisms; specifically, the rate at which compounds may be chemically broken down by bacteria and/or natural environmental factors.

Blowdown

The minimum discharge of recirculating water for the purpose of discharging materials contained in the water, the further buildup of which would cause concentration in amounts exceeding limits established by best engineering practice.

Bromine Water

A nonmetallic halogen element; normally a deep red corrosive toxic liquid used as an oxidizing agent.

Bright Dipping

Using acidic solutions to produce a bright surface on metal.

Capital Recovery Factor

Capital Recovery Factor is defined as:

$i + i/(a - 1)$ where i = interest rate
$a = (1 + i)$ to the power n n = interest period in years

Carbon Bed Catalytic Destruction

A non-electrolytic process for the catalytic oxidation of cyanide wastes using trickling filters filled with lowtemperature coke.

Captive Operation

A manufacturing operation carried out in a facility to support subsequent manufacturing, fabrication, or assembly operations.

Carcinogen

Substance which causes cancerous growth.

Catalytic Bath

A bath containing a substance used to accelerate the rate of chemical reaction.

Category

Also point source category. A segment of industry for which a set of effluent limitations has been established.

Cathode

The negatively charge electrode in an electrochemical process.

Cations

The positively charged ions in a solution.

Caustic

Capable of destroying or eating away by chemical action. Applied to strong bases and characterized by the presence of hydroxyl ions in solution.

Caustic Soda

Sodium hydroxide, NaOH, whose solution in water is strongly alkaline.

Cementation

The electrochemical reduction of metal ions by contact with a metal of higher oxidation potential. It is usually used for the simultaneous recovery of copper and reduction of hexavalent chromium with the aid of scrap iron.

Centrifugation

(Sludge Dewatering) The removal of water in a sludge and water slurry by introducing the water and sludge slurry into a centrifuge. The sludge is driven outward with the water remaining near the center. The water is withdrawn, and the dewatered sludge is usually landfilled.

Centrifuge

A device having a rotating container in which centrifugal force separates substances of differing densities.

Chelate Compound

A compound in which the metal is contained as an integral part of a ring structure and is not readily ionized.

Chelating Agent

A coordinate compound in which a central atom (usually a metal) is joined by covalent bonds to two or more other molecules or ions (called ligands) so that heterocyclic rings are formed with the central (metal) atom as part of each ring. Thus, the compound is suspending the metal in solution.

Chemical Brightening

Process utilizing an addition agent that leads to the formation of a bright plate or that improves the brightness of the deposit.

Chemical Deposition

Process used to deposit a metal oxide on a substrate. The film is formed by hydrolysis of a mixture of chlorides at the hot surface of the substrate. Careful control of the water mixture insures that the oxide is formed on the substrate surface.

Chemical Machining

Production of derived shapes and dimensions through selective or overall removal of metal by controlled chemical attack or etching.

Chemical Metal Coloring

The production of desired colors on metal surfaces by appropriate chemical or electrochemical action.

Chemical Milling

Removing large amounts of stock by etching selected areas of complex workpieces. This process entails cleaning, masking, etching, and demasking.

Chemical Oxidation

(Including Cyanide) The addition of chemical agents to wastewater for the purpose of oxidizing pollutant material.

Chemical Polishing

Use of a chemical solution to put a smooth finish on a metallic surface.

Chemical Precipitation

A chemical process in which a chemical in solution reacts with another chemical introduced to that solution to form a third substance which is partially or mainly insoluble and, therefore, appears as a solid.

Chemical Recovery Systems

Chemical treatment to remove metals or other materials from wastewater for later reuse.

Chemical Reduction

A chemical reaction in which one or more electrons are transferred to the chemical being reduced from the chemical initiating the transfer (reducing agent).

Chromate Conversion Coating

Formed by immersing metal in an aqueous acidified chromate solution consisting substantially of chromic acid or water soluble salts of chromic acid together with various catalysts or activators.

Chromatizing

To treat or impregnate with a chromate (salt of ester of chromic acid) or dichromate, especially with potassium dichromate.

Chrome-Pickle Process

Forming a corrosion-resistant oxide film on the surface of magnesium base metals by immersion in a bath of an alkali bichromate.

Chromophores

Chemical grouping which, when present in an aromatic coumpound, gives color to the compound by causing a displacement of, or appearance of, absorbent bands in the visible spectrum.

Clarification

The composite wastewater treatment process consisting of flash mixing of coagulants, pH adjusting chemicals, and/or polyelectrolytes), flocculation, and sedimentation.

Clarifier

A unit which provides for settling and removal or solids from wastewater.

Cleaning

See: Vapor Degreasing Solvent Cleaning Acid Cleaning Emulstion Cleaning Alkaline Cleaning Salt Bath Descaling Pickling Passivate Abrasive Blast Cleaning Ultrasonic Cleaning

Evaporation using vertical steam-heated tubes.

Closed-Loop Evaporation System

A system used for the recovery of chemicals and water from a chemical finishing process. An evaporator concentrates flow from the rinse water holding tank. The concentrated rinse solution is returned to the bath, and distilled water is returned to the final rinse tank. The system is designed for recovering 100 percent of chemicals normally lost in dragout for reuse in the process.

Closed Loop Rinsing

The recirculation of rinse water without the introduction of additional makeup water.

Coagulation

A chemical reaction in which polyvalent ions neutralize the repulsive charges surrounding colloidal particles.

Coating

See: Aluminum Coating, Hot Dip Coating, Ceramic Coating, Phosphate Coating, Chrome Conversion Coating, Rust-Preventive Compounds, Porcelain Enameling Common Metals

Copper, nickel, chromium, zinc, tin, lead, cadmium, iron, aluminum, or any combination thereof.

Compatible Pollutants

Those pollutants which can be adequately treated in publiclyowned treatment works without upsetting the treatment process.

Conductance

See Electrical Conductivity.

Conductive Surface

A surface that can transfer heat or electricity.

Conductivity Meter

An instrument which displays a quantitative indication of conductance.

Contact Water

See Process Wastewater.

Contamination

Intrusion of undesirable elements.

Continuous Treatment

Treatment of waste streams operating without interruption as opposed to batch treatment: sometimes referred to as flowthrough treatment.

Contractor Removal

Disposal of oils, spent solutions, or sludge by a scavenger service.

Conversion Coating

A coating produced by chemical or electrochemical treatment of a metallic surface that gives a superficial layer containing a compound of the metal. For example, chromate coatings on zinc and cadmium, oxide coatings on steel.

Copper Flash

Quick preliminary deposition of copper for making surface acceptable for subsequent plating.

Coprecipitation of Metals

Precipitation of a metal with another metal.

Cost of Capital

Capital recovery costs minus the depreciation.

Countercurrent Rinsing

Rinsing of parts in such a manner that the rinse water is removed from tank to tank counter to the flow of parts being rinsed.

Crystalline Solid

A substance with an ordered structure, such as a crystal.

Crystallization

1. Process used to manufacture semiconductors in the electronics industry.

2. A means of concentrating pollutants in wastewaters by crystallizing out pure water.

Dead Rinse

A rinse step in which water is not replenished or discharged.

Decarboxylate

Dissociation of carboxylic acid group.

Deep Bed Filtration

The common removal of suspended solids from wastewater streams by filtering through a relatively deep 0.3-0.9 m granular bed. The porous bed formed by the granular media can be designed to remove partically all suspended particles by physical-chemical effects.

Degradable

That which can be reduced, broken down or chemically separated.

Denitrification (Biological)

The reduction of nitrates to nitrogen gas by bacteria.

Deoxidizing

The removal of an oxide film from an alloy such as aluminum oxide.

Depreciation

Decline in value of a capital asset caused either by use or by obsolescence.

Descaling

The removal of scale and metallic oxides from the surface of a metal by mechanical or chemical means. The former includes the use of steam, scale-breakers and chipping tools, the latter method includes pickling in acid solutions.

Desiccator

A container which contains a hydroscopic substance such as silica gel to provide a dry atmosphere.

Dewatering

(Sludge Processing) Removing water from sludge.

Diazotization

A standard method of measuring the concentration of nitrite a solution.

Dibasic Acid

An acid capable of donating two protons (hydrogen ions).

Discharge of Pollutant(s)

1. The addition of any pollutant to navigable waters from any point source.

2. Any addition of any pollutant to the waters of the continguous zone or the ocean from any point source, other than from a vessel or other floating craft. The term "discharge" includes either the discharge of a single pollutant or the discharge of multiple pollutants.

Distillation

Vaporization of a liquid followed by condensation of the vapor.

Distillation-Silver Nitrate Titration

A standard method of measuring the concentration of cyanides in a solution.

Distillation-SPADNS

A standard method of measuring the concetration of fluoride in a solution.

Dollar Base

A period in time in which all costs are related. Investment costs are related by the Sewage Treatment Plant Construction Cost Index. Supply costs are related by the "Industrial Commodities" Wholesale Price Index.

Drag-in

Water or solution carried into another solution by the work and the associated handling equipment.

Dragout

The solution that adheres to the objects removed from a bath, more precisely defined as that solution which is carried past the edge of the tank.

Drainage Phase

Period in which the excess plating solution adhering to the part or workpiece is allowed to drain off.

Drip Station

Empty tank over which parts are allowed to drain freely to decrease end dragout.

Drip Time

The period during which a part is suspended over baths in order to allow the excessive dragout to drain off.

Drying Beds

Areas for dewatering of sludge by evaporation and seepage.

EDTA Titration

EDTA - ethylenediamine tetraacetic acid (or its salts). A standard method of measuring the hardness of a solution.

Effluent

The quantities, rates, and concentrations of chemical, physical, biological, and other constituents which are discharged from point sources.

Effluent Limitation

Any restriction (including schedules of compliance) established by a state or EPA on quantities, rates, and concentrations of chemical, physical, biological, and other constituents which are discharged from point sources into navigable waters, the waters of the contiguous zone, or the ocean.

Electrical Conductivity

The property of a solution which allows an electric current to flow when a potential difference is applied. It is the reciprocal of the resistance in ohms measured between opposite faces of a centimeter cube of an aqueous solution at a specified temperature. It is expressed as microohms per centimeter at temperature degrees Celsius.

Electrobrightening

A process of reversed electro-deposition which results in anodic metal taking a high polish.

Electrode

Conducting material for passing electric current out of a solution by taking up electrons or passing electric current into it by giving up electrons from or to ions in the solution.

Electrodialysis

A treatment process that uses electrical current and an arrangement of permeable membranes to separate soluble minerals from water. Often used to desalinate salt or brackish water.

Electroless Plating

Deposition of a metallic coating by a controlled chemical reduction that is catalyzed by the metal or alloy being deposited.

Electrolysis

The chemical decomposition by an electric current of a substance in a dissolved or molten state.

Electrolyte

A liquid, most often a solution, that will conduct an electric current.

Electrolytic Cell

A unit apparatus in which electrochemical reactions are produced by applying electrical energy or which supplies electrical energy as a result of chemical reactions and which includes two or more electrodes and one or more electrolytes contained in a suitable vessel.

Electrolytic Decomposition

An electrochemical treatment used for the oxidation of cyanides. The method is practical and economical when applied to concentrated solutions such as contaminated baths, cyanide dips, stripping solutions, and concentrated rinses. Electrolysis is carried out at a current density of 35 amp/sq. ft. at the anode and 70 amp/sq. ft. at the cathode. Metal is deposited at the cathode and can be reclaimed.

Electrolytic Oxidation

A reaction by an electrolyte in which there is an increase in valence resulting from a loss of electrons.

Electrolytic Reduction

A reaction in which there is a decrease in valence resulting from a gain in electrons.

Electrometric Titration

A standard method of measuring the alkalinity of a solution.

Electroplating

The production of a thin coating of one metal on another by electrodeposition.

Electroplating Process

An electroplating process includes a succession of operations starting with cleaning in alkaline solutions, acid dipping to neutralize or acidify the wet surface of the parts, followed by electroplating, rinsing to remove the processing solution from the workpiece, and drying.

Electropolishing

Electrolytic corrosion process that increases the percentage of specular reflectance from a metallic surface.

Emulsifying Agent

A material that increases the stability of a dispersion of one liquid in another.

Emulsion Breaking

Decreasing the stability of dispersion of one liquid in another.

Emulsion Cleaning

Organic solvents dispersed in an aqueous medium with the aid of an emulsifying agent.

End-of-Pipe Treatment

The reduction and/or removal of pollutants by chemical treatment just prior to actual discharge.

Environmental Protection Agency

The United States Environmental Protection Agency.

EPA

See Environmental Protection Agency.

Equalibrium Concentration

A state at which the concentration of chemicals in a solution remain in a constant proportion to one another.

Equalization

(Continuous Flow) Holding tank is used to give a continuous flow for a system that has widely varying inflow rates.

Ester

An organic compound corresponding in structure to a salt in inorganic chemistry. Esters are considered as derived from the acids by the exchange of the replaceable hydrogen of the latter for an organic alkyl radical. Esters are not ionic compounds, but salts usually are.

Etchant

An agent used to remove material by means of a chemical action.

Etchback

The chemical process of removing glass fibers and epoxy between neighboring conductor layers of a PC board for a given distance.

Etching

A process where material is removed by chemical action.

Evaporation Ponds

Liquid waste disposal areas that allow the liquid to vaporize to cool discharge water temperatures or to thicken sludge.

Fehling's Solution

A reagent used as a test for sugars, aldehydes, etc. It consists of two solutions, one of copper sulfate, the other of alkaline tartrate, which are mixed just before use. Benedict's modification is a one solution preparation. For details, see Book of Methods, Association of Official Analytical Chemists.

Fermentation

A chemical change to break down biodegradable waste. The change is induced by a living organism or enzyme, specifically bacteria or microorganisms occurring in unicellular plants such as yeast, molds, or fungi.

Ferrous

Relating to or containing iron.

Filtrate

Liquid after passing through a filter.

Filtration

Removal of solid particles from liquid or particles from air or gas stream by means of a permeable membrane.

Types: Gravity
Pressure
Microstraining
Ultrafiltration
Reverse Osmosis (Hyperfiltration)

Flameless Atomic Absorption

A method of measuring the mercury concentration of a solution.

Flash Evaporation

Evaporation using steam heated tubes with feed material under high vacuum. Feed material "flashes off" when it enters the evaporation chamber.

Flocculation

The process of separating suspended solids from wastewater by chemical creation of clumps or flocs.

Flotation

The process of removing finely divided particles from a liquid suspension by attaching gas bubbles to the particles, increasing their buoyancy, and thus concentrating them at the surface of the liquid medium.

Fog

A type of rinse consisting of a fine spray.

Free Cyanide

1. True - the actual concentration of cyanide radical or equivalent alkali cyanide not combined in complex ions with metals in solutions.

2. Calculated - the concentration of cyanide or alkali cyanide present in solution in excess of that calculated as necessary to form a specified complex ion with a metal or metals present in solution.

3. Analytical - the free cyanide content of a solution as determined by a specified analytical method.

Freezing/Crystallization

The solidification of a liquid into aggregations of regular geometric forms (crystals) accomplished by subtraction of heat from the liquid. This process can be used for removal of solids, oils, greases, and heavy metals from industrial wastewater.

Gas Chromotagrophy

Chemical analytical instrumentation generally used for quantitative organic analysis.

Gas Phase Separation

The process of separating volatile constituents from water by the application of selective gas permeable membranes.

Glass Fiber Filtration

A standard method of measuring total suspended solids.

Glycine

Aminoacetic acid. The only amino acid lacking an asymmetric center. NH_2CH_2COOH.

Good Housekeeping

(In-Plant Technology) Good and proper maintenance minimizing spills and upsets.

GPD

Gallons per day.

Grab Sample

A single sample of wastewater taken without regard to time or flow.

Gravimetric 103-105C

A standard method of measuring total solids in aqueous solutions.

Gravimetric 550C

A standard method of measuring total volatile solids in aqueous solutions.

Gravity Filtration

Settling of heavier and rising of lighter constituents within a solution.

Gravity Flotation

The separation of water and low density contaminants such as oil or grease by reduction of the wastewater flow velocity and turbulence for a sufficient time to permit separation due to difference in specific gravity. The floated material is removed by some skimming technique.

Hardness

A characteristic of water, imparted by salts of calcium, magnesium and iron such as bicarbonates, carbonates, sulfates, chlorides and nitrates, that cause curdling of soap, deposition of scale, damage in some industrial processes and sometimes objectionable taste. It may be determined by a standard laboratory procedure or computed from the amounts of calcium and magnesium as well as iron, aluminum, manganese, barium, strontium, and zinc and is expressed as equivalent calcium carbonate.

Heat Treatment

The addition of heat to a substance to effect a temperature increase in that substance which results in its permanent physical or chemical alteration.

Heavy Metals

Metals which can be precipitated by hydrogen sulfide in acid solution, e.q., lead, silver, gold, mercury, bismuth, copper, neckel, iron, chromium, zinc, cadmium, and tin.

Hexadentate

Pertaining to structure, having member connections in six positions.

Hydrofluoric Acid

Hydrogen fluoride in aqueous solution.

Hydrogen Embrittlement

Embrittlement of a metal or alloy caused by absorption of hydrogen during a pickling, cleaning, or plating process.

Hydrophilic

A surface having a strong affinity for water or being readily wettable.

Hydrophobic

A surface which is non-wettable or not readily wettable.

Hydrostatic Pressure

The force per unit area measured in terms of the height of a column of water under the influence of gravity.

Immersed Area

Total area wetted by the solution or plated area plus masked area.

Immersion Plate

A metallic deposit produced by a displacement reaction in which one metal displaces another from solution, for example:

$$Fe + Cu(+2) = Cu + Fe(+2)$$

Incineration

(Sludge Disposal) The combustion (by burning) of organic matter in wastewater sludge solids after water evaporation from the solids.

Incompatible Pollutants

Those pollutants which would cause harm to, adversely affect the performance of, or be inadequately treated in publicly-owned treatment works.

Independent Operation

Job shop or contract shop in which electroplating is done on workpieces owned by the customer.

Industrial User

Any industry that introduces pollutants into public sewer systems and whose wastes are treated by a publicly-owned treatment facility.

Industrial Wastes

The liquid wastes from industrial processes, as distinct from domestic or sanitary wastes.

Inhibition

The slowing down or stoppage of chemical or biological reactions by certain compounds or ions.

In-Process Control Technology

The regulation and the conservation of chemicals and rinse water throughout the operations as opposed to end-of-pipe treatment.

Inspection

A checking or testing of something against standards or specification.

Intake Water

Gross water minus reused water.

Integrated Chemical Treatment

A waste treatment method in which a chemical rinse tank is inserted in the plating line between the process tank and the water rinse tank. The chemical rinse solution is continuously circulated through the tank and removes the dragout while reacting chemicals with it.

Integrated Circuit (IC)

1. A combination of interconnected circuit elements inseparably associated on or within a continuous substrate.

2. Any electronic device in which both active and passive elements are contained in a single package. Methods of making an integrated circuit are by masking process, screening and chemical deposition.

Investment Costs

The capital expenditures required to bring the treatment or control technology into operation.

Ion Exchange

A reversible chemical reaction between a solid (ion exchanger) and a fluid (usually a water solution) by means of which ions may be interchanged from one substance to another. The superficial physical structure of the solid is not affected.

Ion Exchange Resins

Synthetic resins containing active groups (usually sulfonic, carboxylic, phenol, or substituted amino groups) that give the resin the property of combining with or exchanging ions between the resin and a solution.

Ion-Flotation Technique

Treatment for electroplating rinse waters (containing chromium and cyanide) in which ions are separated from solutions by flotation.

Iridite Dip Process

Dipping process for zinc or zinc-coated objects that deposits protective film that is a chromium gel, chromium oxide, or hydrated chromium oxide.

Isolation

Segregation of a waste for separate treatment and/or disposal.

Jackson Units

The standard unit for measuring turbidity.

Kinematic Viscosity

The viscosity of a fluid divided by its density. The C.G.S. unit is the stoke (cm_2/sec).

Lagoon

A man-made pond or lake for holding wastewater for the removal of suspended solids. Lagoons are also used as retention ponds after chemical clarification to polish the effluent and to safeguard against upsets in the clarifier: for stabilization of organic matter by biological oxidation; for storage of sludge; and for cooling of water.

Laminate

1. A composite metal, usually in form of sheet or bar, composed of two or more metal layers so bonded that the composite metal forms a structural member.

2. To form a metallic product of two or more bonded layers.

Landfill

Disposal of inert, insoluble waste solids by dumping at an approved site and covering the earth.

Leach Field

An area of ground to which wastewater is discharged. Not considered an acceptable treatment method for industrial wastes.

Leaching

Dissolving out by the action of a percolating liquid, such as water, seeping through a sanitary landfill.

Level I

BPT technology or effluent limitations.

Level II

BAT technology or effluent limitations.

Level III

New Source Performance Standards.

Ligands

The molecules attached to the central atom by coordinate covalent bonds.

Liquid/Liquid Extraction

A process of extracting or removing contaminant(s) from a liquid by mixing contaminated liquid with another liquid which is immiscible and which has a higher affinity for the contaminating substance(s).

Manual Plating

Plating in which the workpieces are conveyed manually through successive cleaning and plating tanks.

Masking

The application of a substance to a surface for the prevention of plating to said area.

Mechanical Agitation

The agitation of a liquid medium through the use of mechanical such as impellers or paddles.

Membrane

A thin sheet of synthetic polymer through the apertures of which small molecules can pass, while larger ones are retained.

Membrane Filtration

Filtration at pressures ranging from 50 to 100 psig with the use of membranes or thin films. The membranes have accurately controlled pore sites and typically low flux rates.

Mercuric Nitrate Titration

A standard method of measuring chloride.

Metal Ion

An atom or radical that has lost or gained one or more electrons and has thus acquired an electric charge. Positively charged ions are cations, and those having a negative charge are anions. An ion often has entirely different properties from the element (atom) from which it was formed.

Methylene Blue Method

A standard method of measuring surfactants in aqueous solutions.

Microstraining

A process for removing solids from water, which consists of passing the water stream through a microscreen with the solids being retained on the screen.

Molecule

Chemical units composed of one or more atoms.

Monitoring

The measurement, sometimes continuous, of water quality.

Multi-Effect Evaporator

A series of evaporations and condensations with the individual units set up in series and the latent heat of vaporization from one unit used to supply energy for the next.

National Pollutant Discharge Elimination System (NPDES)

The federal mechanism for regulating point source discharge by means of permits.

Navigable Waters

All navigable waters of the United States; tributaries of navigable waters of the United States; interstate waters, intrastate lakes, rivers and streams which are utilized for recreational or other purposes.

Neutralization

Chemical addition of either acid or base to a solution such that the pH is adjusted to 7.

New Source

Any building, structure, facility, or installation from which there is or may be the discharge of pollutants, the construction of which is commenced after the publication of proposed regulations prescribing a standard of performance under Section 306 of the Act which will be applicable to such source if such standard is thereafter promulgated in accordance with Section 306 of the Act.

New Source Performance Standards (NSPS)

Performance standards for the industry and applicable new sources as defined by Section 306 of the act.

Nitrification (Biological)

The oxidation of nitrogenous matter into nitrates by bacteria.

Noncontact Cooling Water

Water used for cooling which does not come into direct contact with any raw material, intermediate product, waste product, or finished product.

Nonferrous

No iron content.

Non-Water Quality Environmental Impact

The ecological impact as a result of solid, air, or thermal pollution due to the application of various wastewater technoligies to achieve the effluent guidelines limitations. Associated with the non-water quality aspect is the energy impact of wastewater treatment.

NPDES

See National Pollutant Discharge Elimination System.

Operation and Maintenance Costs

The cost of running the wastewater treatment equipment. This includes labor costs, material and supply costs, and energy and power costs.

Organic Compound

Any substance that contains the element carbon, with the exception of carbon dioxide and various carbonates.

Oxidants

Those substances which aid in the formation of oxides.

Oxidizable Cyanide

Cyanide amenable to oxidation by chlorine.

Oxidizing

Combining the material concerned with oxygen.

Parameter

A characteristic element of constant factor.

Passivation

The changing of the chemically active surface of a metal to a much less reactive state by means of an acid dip.

pH

A unit for measuring hydrogen ion concentrations. A ph of 7 indicates a "neutral" water or solution. At pH lower than 7, a solution is acidic. At pH higher than 7, a solution is alkaline.

pH Buffer

A substance used to stabilize the acidity or alkalinity in a solution.

Phenols

A group of aromatic compounds having the hydroxyl group directly attached to the benzene ring. Phenols can be a contaminant in a waste stream from a manufacturing process.

Phosphate Coating

Process of forming a conversion coating on iron or steel by immersing in a hot solution of manganese, iron or zince phosphate.

Phosphates

Salts or esters of phosphoric acid. Often used in phosphating a metal part prior to painting or porcelainizing.

Photoresists

Thin coatings produced from organic solutions which when exposed to light of the proper wave length are chemically changed in their solubility to certain solvents (developers). This substance is placed over a surface which is to be protected during processing such as in the etching of printed circuit boards.

Pickle

An acid solution used to remove oxides or other compounds related to the basis metal from the surface of a metal by chemical or electrochemical action.

Pickling

The process of removing scale, oxide, or foreign matter from the surface of metal by immersing it in a bath containing a suitable

chemical reagent which will attack the oxide or scale but will not appreciably act upon the metal during the period of pickling. Frequently it is necessary to immerse the metals in a detergent solution or to degrease in a vapor before pickling.

Plant Effluent or Discharge After Treatment

The wastewater discharged from the industrial plant. In this definition, any waste treatment device (pond, trickling filter, etc.) is considered part of the industrial plant.

Plated Area

Surface upon which an adherent layer of metal is deposited.

Plating

Forming an adherent layer of metal upon an object.

Point Source

Any discernible, confined, and discrete conveyance including, but not limited to, any pipe, ditch, channel, tunnel, conduit, well, discrete fissure, container, rolling stock, concentrated animal feeding operation, or vessel or other floating craft from which pollutants are or may be discharged.

Point Source Category

See Category.

Pollutant

Dredged spoil, solid waste, incinerator residue, sewage, garbage, sewage sludge, munitions, chemical wastes, biological materials, radioactive materials, heat, wrecked or discarded equipment, rock, sand, cellar dirt and industrial, municipal and agricultural waste discharged into water. It does not mean (1) sewage from vessels or (2) water, gas, or other material which is injected into a well to facilitate production of oil or gas, or water derived in association with oil or gas production and disposed of in a well, if the well, used either to facilitate production or for disposal purposes, is approved by authority of the State in which the well is located, and if such State determines that such injection or disposal will not result in degradation of ground or surface water resources.

Pollutant Parameters

Those constituents of wastewater determined to be detrimental and, therefore, requiring control.

Pollution

The man-made or man-induced alteration of the chemical, physical, biological, and radiological integrity of water.

Polyelectrolyte

A high polymer substance, either natural or synthetic, containing ionic constituents; they may be either cationic or anionic.

Precious Metals

Gold, silver, iridium, palladium, platinum, rhodium, ruthenium, or combination thereof.

Precipitate

The discrete particles of material rejected from a liquid solution.

Precipitation Hardening Metals

Certain metal compositions which respond to precipitation hardening or aging treatment.

Pressure Filtration

The process of solid/liquid phase separation effected by passing the more permeable liquid phase through a mesh which is impenetrable to the solid phase.

Pretreatment

Treatment of wastewaters from sources before introduction into municipal treatment works.

Primary Settling

The first treatment for the removal of settleable solids from wastewater which is passed through a treatment works.

Primary Treatment

The first stage in wastewater treatment in which floating or settleable solids are mechanically removed by screening and sedimentation.

Printed Circuit Boards

A circuit in which the interconnecting wires have been replaced by conductive strips printed, etched, etc., onto an insulating board. Methods of fabrication include etched circuit, electroplating, and stamping.

Printing

A process whereby a design or pattern in ink or types of pigments are impressed onto the surface of a part.

Process Modification

(In-Plant Technology) Reduction of water pollution by basic changes in a manufacturing process.

Process Wastewater

Any water which, during manufacturing or processing, comes into direct contact with or results from the production or use of any raw material, intermediate product, finished product, byproduct, or waste product.

Pyrolysis

(Sludge Removal) Decomposition of materials by the application of heat in an oxygen-deficient atmosphere.

Pyrazolone-Colorimetric

A standard method of measuring cyanides in aqueous solutions.

Racking

The placement of parts on an apparatus for the purpose of plating.

Rack Plating

Electroplating of workpieces on racks.

Receiving Waters

Rivers, lakes, oceans, or other water courses that receive treated or untreated wastewaters.

Recirculating Spray

A spray rinse in which the drainage is pumped up to the spray and is continually recirculated.

Recycle Lagoon

A pond that collects treated wastewater, most of which is recycled as process water.

Reducing

Destroying a wastewater constituent by means of a reducing agent such as sulfur dioxide.

Reduction

A reaction in which there is a decrease in valance resulting from a gain in electrons.

Redox

A term used to abbreviate a reduction-oxidation reaction.

Residual Chlorine

The amount of chlorine left in the treated water that is available to oxidize contaminants.

Reverse Osmosis

The application of pressure to the surface of solution, thus forcing pure water to pass from the solution through a semipermeable membrane that is too dense to permit passage of the solute, leaving behind the dissolved solids (concentrate).

Rinse

Water for removal of dragout by dipping, spraying, fogging, etc.

Rochelle Salt

Sodium potassium tartrate: $KNaC_4H_4O_6 \cdot 4H_2O$.

Running Rinse

A rinse tank in which water continually flows in and out.

Rust Prevention Compounds

Coatings used to protect iron and steel surfaces, against corrosive environments during fabrication, storage, or use.

Salt

1. The compound formed when the hydrogen of an acid is replaced by a metal or its equivalent (e.g., and NH_4 radical). Example:

$$HCL + NaOH = NaCL + H_2O$$

This is typical of the general rule that the reaction of an acid and a base yields a salt and water. Most salts ionize in water solutions.

2. Common salt, sodium chloride, occurs widely in nature, both as deposits left by ancient seas and in the ocean, where its average concentration is about 3%.

Salt Bath Descaling

Removing the layer of oxides formed on some metals at elevated temperatures in a salt solution.

See: Reducing Oxidizing Electrolytic

Sand Bed Drying

The process of reducing the water content in a wet substance by transferring that substance to the surface of a sand bed and allowing the processes of drainage through the sand and evaporation to effect the required water separation.

Sand Filtration

A process of filtering wastewater through sand. The wastewater is trickled over the bed of sand where air and bacteria decompose the wastes. The clean water flows out through drains in the bottom of the bed. The sludge accumulating at the surface must be removed from the bed periodically.

Sanitary Water

The supply of water used for sewage transport and the continuation of such effluents to disposal.

Sanitary Sewer

Pipes and conveyances for sewage transport.

Save Rinse

See Dead Rinse.

Scale

Oxide and metallic residues.

Screening

Selectively applying a resist material to a surface to be plated.

Secondary Treatment

The second step in most sanitary waste treatment plants in which bacteria consume the organic portions of the waste. This removal is accomplished by trickling filters, an activated sludge unit, or other processes.

Sedimentation

The process of subsidence and deposition of suspended matter carried by water, wastewater, or other liquids by gravity. It is usually accomplished by reducing the velocity of the liquid below the point at which it can transport the suspended material. Also called settling.

Sensitization

The process in which a substance other than the catalyst is present to facilitate the start of a catalytic reaction.

Sequestering Agent

An agent (usually a chemical compound) that "sequesters" or holds a substance in suspension.

Series Rinse

A series of tanks which can be individually heated or level controlled.

Settleable Solids

That matter in wastewater which will not stay in suspension during a preselected settling period, such as one hour, but either settles to the bottom or floats to the top.

Settling Ponds

A large shallow body of water into which industrial wastewaters are discharged. Suspended solids settle from the wastewaters due to the large retention time of water in the pond.

Skimming

The process of removing floating solid or liquid wastes from a wastewater stream by means of a special tank and skimming mechanism prior to treatment of the water.

Slaking

The process of reacting lime with water to yield a hydrated product.

Sludge

Residue produced in a waste treatment process.

Slug Dose

A discharge in which the concentration of a material is significantly higher than the average concentration. This discharge exists only over a short period of time before the concentration returns to its average value.

Slurry

A watery suspension of solid materials.

Solder Electroplate

60/40 tin/lead alloy used as etching resist.

Solid-Liquid Interface

The boundary layer between the solid and the liquid in which mass transfer is diffusion controlled.

Solids

(Plant Waste) Residue material that has been completely dewatered.

Solute

A dissolved substance.

Solution

Homogeneous mixture of two or more components such as a liquid or a solid in a liquid.

Solvent

A liquid used to dissolve materials. In dilute solutions the component present in large excess is called the solvent, and the dissolved substance is called the solute.

Solvent Cleaning

Removal of oxides, soils, oils, fats, waxes, greases, etc. by solvents.

Specific Conductance

The property of a solution which allows an electric current to flow when a potential difference is applied.

Spectrophotometry

A method of analyzing a wastewater sample by means of the spectra emitted by its constituents under exposure to light.

Spray Rinse

A process which utilizes the expulsion of water through a nozzle as a means of rinsing.

Standard of Performance

Any restriction established by the Administrator pursuant to Section 306 of the Act on quantities, rates and concentrations of chemical, physical, biological, and other constituents which are or may be discharged from new sources into navigable waters, the waters of the contiguous zone or the ocean.

Stannous Salt

Tin based compound used in the acceleration process. Usually stannous chloride.

Still Rinse

See Dead Rinse.

Strike

A thin coating of metal (usually less than 0.0001 inch in thickness) to be followed by other coatings.

Stripping

The removal of coatings from metal.

Subcategory or Subpart

A segment of a point source category for which specific effluent limitations have been established.

Submerged Tube Evaporation

Evaporation of feed material using horizontal steam-heat tubes submerged in solution. Vapors are driven off and condensed while concentrated solution is bled off.

Subtractive Circuitry

Circuitry produced by the selective etching of a previously deposited copper layer.

Surface Tension

A measure of the force opposing the spread of a thin film of liquid.

Surface Waters

Any visible stream or body of water.

Surfactants

Surface active chemicals which tend to lower the surface tension between liquids, such as between acid and water.

Surge

A sudden rise to an excessive value, such as flow, pressure, temperature.

Testing

An examination, observation, or evaluation to determine that article under inspection is in accordance with required specifications.

Thickener

A device or system wherein the solid contents of slurries or suspensions are increased by gravity settling and mechanical separation of the phases, or by flotation and mechanical separation of the phases.

Thickening

(Sludge Dewatering) Thickening or concentration is the process of removing water form sludge after the initial separation of the sludge from wastewater. The basic objective of thickening is to reduce the volume of liquid sludge to be handled in subsequent sludge disposal processes.

Threshold Toxicity

Limit upon which a substance becomes toxic or poisonous to a particular organism.

Through Hole Plating

The plating of the inner surfaces of holes in a PC board.

Titration

1. A method of measuring acidity or alkalinity.

2. The determination of a constituent in a known volume of solution by the measured addition of a solution of known strength for completion of the reaction as signaled by observation of an end point.

Total Chromium

The sum of chromium in all valences.

Total Cyanide

The total content of cyanide expressed as the radical CNor alkali cyanide whether present as simple or complex ions. The sum of both the combined and free cyanide content of a plating solution. In analytical terminology, total cyanide is the sum of cyanide amenable to oxidation by chlorine and that which is not according to standard analytical methods.

Trickling Filters

A filter consisting of an artificial bed of coarse material, such as broken stone, clinkers, slate, slats, or brush over which an effluent is distributed and applied in drops, films, or spray from troughs, drippers, moving distributors, or fixed nozzles and through which it trickles to the underdrains giving opportunity for the formation of zoological slimes which clarify and oxidize the effluent.

Tridentate

Pertaining to structure, having member connections in three positions.

Turbidimeter

An instrument for measurement of turbidity in which a standard suspension is usually used for reference.

Turbidity

1. A condition in water or wastewater caused by the presence of suspended matter resulting in the scattering and absorption of light rays.

2. A measure of fine suspended matter in liquids.

3. An analytical quantity usually reported in arbitrary turbidity units determined by measurements of light diffraction.

Ultrafiltration

A process using semipermeable polymeric membranes to separate molecular or colloidal materials dissolved or suspended in a liquid phase when the liquid is under pressure.

Ultrasonic Agitation

The agitation of a liquid medium through the use of ultrasonic waves.

Ultrasonic Cleaning

Immersion cleaning aided by ultrasonic waves which cause microagitation.

Vacuum Filtration

A sludge dewatering process in which sludge passes over a drum with a filter medium, and a vacuum is applied to the inside of the drum

compartments. As the drum rotates, sludge accumulates on the filter surface, and the vacuum removes water.

Vapor Degreasing

Removal of soil and grease by a boiling liquid solvent, the vapor being considerably heavier than air. At least one constituent of the soil must be soluble in the solvent.

Vapor Blasting

A method of roughing plastic surfaces in preparation for plating.

Viscosity

The resistance offered by a real fluid to a shear stress.

Volatile Substances

Material that is readily vaporizable at a relatively low temperature.

Volumetric Method

A standard method of measuring settleable solids in an aqueous solution.

Waste Discharged

The amount (usually expressed as weight) of some residual substance which is suspended or dissolved in the plant effluent.

Wastewater Constituents

Those materials which are carried by or dissolved in a water stream for disposal.

Wastewater

Any water that has been released from the purpose for which is was intended to be used.

Water Recirculation or Recycling

The volume of water already used for some purpose in the plant which is returned with or without treatment to be used again in the same or another process.

Water Use

The total volume of water applied to various uses in the plant. It is the sum of water recirculation and water withdrawal.

Water Withdrawal or Intake

The volume of fresh water removed from a surface or underground water source by plant facilities or obtained from some source external to the plant.

Wet Air Oxidation

(Sludge Disposal) This process oxidizes the sludge in the liquid phase without mechanical dewatering. High-pressure high-temperature air is brought into contact with the waste material in a pressurized reactor. Oxidation occurs at 300 to 500 degrees F and from several hundred to 3,000 psig.

Wholesale Price Index

A measure of the fluctuation of the wholesale price of goods and services with time. The base period to which all wholesale prices are related is 1967 (index = 100).

Withdrawal Phase

Period for the part or workpiece from an immersion tank.

Workpiece

The item to be processed.

TABLE 15-1

METRIC TABLE

CONVERSION TABLE

MULTIPLY (ENGLISH UNITS)		by	TO OBTAIN (METRIC UNITS)	
ENGLISH UNIT	ABBREVIATION	CONVERSION	ABBREVIATION	METRIC UNIT
acre	ac	0.405	ha	hectares
acre - feet	ac ft	1233.5	cu m	cubic meters
British Thermal Unit	BTU	0.252	kg cal	kilogram - calories
British Thermal Unit/pound	BTU/lb	0.555	kg cal/kg	kilogram calories/kilogram
cubic feet/minute	cfm	0.028	cu m/min	cubic meters/minute
cubic feet/second	cfs	1.7	cu m/min	cubic meters/minute
cubic feet	cu ft	0.028	cu m	cubic meters
cubic feet	cu ft	28.32	l	liters
cubic inches	cu in	16.39	cu cm	cubic centimeters
degree Fahrenheit	°F	0.555(°F-32)*	°C	degree Centigrade
feet	ft	0.3048	m	meters
gallon	gal	3.785	l	liters
gallon/minute	gpm	0.0631	l/sec	liters/second
horsepower	hp	0.7457	kw	killowatts
inches	in	2.54	cm	centimeters
inches of mercury	in Hg	0.03342	atm	atmospheres
pounds	lb	0.454	kg	kilograms
million gallons/day	mgd	3,785	cu m/day	cubic meters/day
mile	mi	1.609	km	kilometer
pound/square inch (gauge)	psig	(0.06805 psig +1)*	atm	atmospheres (absolute)
square feet	sq ft	0.0929	sq m	square meters
square inches	sq in	6.452	sq cm	square centimeters
ton (short)	ton	0.907	kkg	metric ton (1000 kilograms)
yard	yd	0.9144	m	meter

* Actual conversion, not a multiplier

☆U.S. GOVERNMENT PRINTING OFFICE:1980-311-132/165

United States
Environmental Protection
Agency
Washington DC 20460
WH 552

Official Business
Penalty for Private Use $300

Postage and Fees Paid
Environmental Protection Agency
EPA-335

Special
Fourth-Class
Rate
Book